AlphaServer 2100A/2100A RM /2100A CAB Series

Service Guide

Order Number: EK–2100A–SV. A01

Digital Equipment Corporation
Maynard, Massachusetts

First Printing, February 1996

Digital Equipment Corporation makes no representations that the use of its products in the manner described in this publication will not infringe on existing or future patent rights, nor do the descriptions contained in this publication imply the granting of licenses to make, use, or sell equipment or software in accordance with the description.

Possession, use, or copying of the software described in this publication is authorized only pursuant to a valid written license from Digital or an authorized sublicensor.

Copyright © Digital Equipment Corporation, 1996. All Rights Reserved.

The following are trademarks of Digital Equipment Corporation: AlphaServer, DEC, DECchip, DEC VET, Digital, OpenVMS, StorageWorks, VAX DOCUMENT, and the DIGITAL logo.

Digital UNIX Version 3.0 is an X/Open UNIX 93 branded product. Microsoft WindowsNT is a trademark of Microsoft Corp.

All other trademarks and registered trademarks are the property of their respective holders.

FCC NOTICE: The equipment described in this manual generates, uses, and may emit radio frequency energy. The equipment has been type tested and found to comply with the limits for a Class A computing device pursuant to Subpart J of Part 15 of FCC Rules, which are designed to provide reasonable protection against such radio frequency interference when operated in a commercial environment. Operation of this equipment in a residential area may cause interference, in which case the user at his own expense may be required to take measures to correct the interference.

S3005

This document was prepared using VAX DOCUMENT Version 2.1.

Contents

Preface xiii

1 Troubleshooting Strategy

1.1 Troubleshooting the System 1–1
1.1.1 Problem Categories 1–2
1.2 Service Tools and Utilities 1–8
1.3 Information Services 1–10

2 Power-Up Diagnostics and Displays

2.1 Interpreting the Power-Up Display 2–2
2.2 Power-Up Screen 2–8
2.2.1 Multiprocessor Failover 2–9
2.2.2 Console Event Log 2–10
2.3 Mass Storage Problems Indicated at Power-Up 2–12
2.4 PCI Bus Problems Indicated at Power-Up 2–16
2.5 EISA Bus Problems Indicated at Power-Up 2–16
2.5.1 Additional EISA Troubleshooting Tips 2–17
2.6 Fail-Safe Loader 2–18
2.6.1 Fail-Safe Loader Functions 2–19
2.6.2 Activating the Fail-Safe Loader 2–20
2.7 Interpreting System LEDs 2–22
2.7.1 Power Supply LEDs (BA740/BA744 Enclosures) 2–23
2.7.2 Halt Button LED (At Power-Up) 2–26
2.7.3 Storage Device LEDs 2–27
2.8 Power-Up Sequence 2–29
2.8.1 AC Power-Up Sequence 2–30
2.8.2 DC Power-Up Sequence 2–30
2.9 Firmware Power-Up Diagnostics 2–33
2.9.1 Serial ROM Diagnostics 2–34
2.9.2 Console Firmware-Based Diagnostics 2–35

3 Running System Diagnostics

3.1 Running ROM-Based Diagnostics 3–1
3.2 Command Summary 3–2
3.3 Command Reference 3–3
3.3.1 test 3–4
3.3.2 sys_exer 3–6
3.3.3 show fru 3–8
3.3.4 show error 3–10
3.3.5 clear_error 3–13
3.3.6 exer_read 3–14
3.3.7 memexer 3–16
3.3.8 memexer_mp 3–18
3.3.9 nettest 3–19
3.3.10 net -s 3–21
3.3.11 net -ic 3–22
3.3.12 kill and kill_diags 3–23
3.3.13 show_status 3–24
3.4 Acceptance Testing and Initialization 3–25
3.5 DEC VET 3–25

4 Error Log Analysis

4.1 Fault Detection and Reporting 4–1
4.1.1 Machine Check/Interrupts 4–3
4.1.2 System Bus Transaction Cycle 4–4
4.2 Error Logging and Event Log Entry Format 4–5
4.3 Event Record Translation 4–5
4.4 Error Log Analysis–Interpreting System Faults 4–5

5 System Configuration and Setup

5.1 Verifying System Configuration 5–2
5.1.1 System Firmware 5–5
5.1.2 Switching Between Interfaces 5–6
5.1.3 Verifying Configuration: ARC Menu Options for Windows NT 5–7
5.1.3.1 Display Hardware Configuration 5–7
5.1.3.2 Set Default Variables 5–10

5.1.4 Verifying Configuration: SRM Console Commands for Digital UNIX and OpenVMS 5–12
5.1.4.1 show config 5–13
5.1.4.2 show device 5–16
5.1.4.3 show memory 5–17
5.1.4.4 Setting and Showing Environment Variables 5–18
5.2 System Bus Options 5–27
5.2.1 CPU Modules 5–28
5.2.2 Memory Modules, Pedestal (BA740-B9) and Rackmount (BA744-A9) Systems 5–30
5.3 System Backplane (BA740-B9) or PCI/EISA Backplane (BA744-A9) 5–30
5.4 EISA Bus Options 5–31
5.5 ISA Bus Options 5–31
5.5.1 Identifying ISA and EISA options 5–31
5.6 EISA Configuration Utility 5–32
5.6.1 Before You Run the ECU 5–33
5.6.2 How to Start the ECU 5–33
5.6.3 Configuring EISA Options 5–35
5.6.4 Configuring ISA Options 5–36
5.7 PCI Bus Options 5–38
5.7.1 PCI-to-PCI Bridge 5–38
5.8 SCSI Buses 5–39
5.8.1 Onboard SCSI Bus, Pedestal (BA740-B9) Systems 5–39
5.8.2 Internal StorageWorks Shelves, Pedestal (BA740-B9) Systems 5–40
5.8.3 Onboard SCSI Bus, Rackmount (BA744-A9) Systems 5–45
5.8.4 External SCSI Expansion 5–45
5.8.5 Installing Removable Media Devices, Pedestal (BA740-B9) Systems 5–45
5.8.6 Installing StorageWorks Fixed-Disks, Pedestal (BA740-B9) 5–46
5.8.7 Installing Removable Media Devices, Rackmount (BA744-A9) Systems 5–48
5.8.8 Installing Fixed-Disks, Rackmount (BA744-A9) Systems 5–50
5.9 Power Supply Configurations 5–50
5.9.1 Power Supplies: Pedestal (BA740-B9) Systems 5–51
5.9.2 Power Supplies: Rackmount (BA744-A9) Systems 5–53
5.10 Console Port Configurations 5–56
5.10.1 set console 5–56
5.10.2 set tt_allow_login 5–57

5.10.3 set com1_baud or com2_baud 5–57
5.10.4 set tga_sync_green 5–58
5.10.5 Setting Up a Serial Terminal to Run ECU 5–58

6 AlphaServer 2100A (BA740-B9 Enclosure) FRU Removal and Replacement

6.1 AlphaServer 2100A (BA740-B9 Enclosure) FRUs 6–1
6.2 Removal and Replacement 6–7
6.2.1 Cables 6–9
6.2.2 CPU Modules 6–16
6.2.3 Fans and Fan Speed Control Board 6–20
6.2.4 Remote I/O Module 6–23
6.2.5 StorageWorks Drive 6–24
6.2.6 Internal StorageWorks Backplane 6–25
6.2.7 Internal StorageWorks Terminator and Jumper 6–27
6.2.8 Memory Modules 6–28
6.2.9 System Backplane 6–29
6.2.10 OCP Module 6–34
6.2.11 Power Supply 6–36
6.2.12 Speaker 6–37
6.2.13 Removable Media 6–38

7 AlphaServer 2100A RM/CAB (BA744-A9 Enclosure) FRU Removal and Replacement

7.1 AlphaServer 2100A RM/CAB (BA744-A9 Enclosure) FRUs 7–1
7.2 Removal and Replacement 7–6
7.2.1 Sliding System Out 7–6
7.2.2 Accessing Enclosure Compartments 7–9
7.2.3 Cables 7–13
7.2.4 CPU Modules 7–22
7.2.5 Fans 7–26
7.2.6 Fan Speed Control Board 7–27
7.2.7 Remote I/O Module 7–28
7.2.8 Memory Modules 7–29
7.2.9 OCP Module 7–30
7.2.10 Power Supply 7–31
7.2.11 Speaker 7–34
7.2.12 System Backplane 7–35
7.2.13 Fixed Disk Drives 7–47
7.2.14 Removable Media 7–47

Glossary

Index

Figures

1	AlphaServer 2100A Systems Included in this Guide	xiv
2–1	Operator Control Panel Power-Up/Diagnostic Display	2–2
2–2	Fail-Safe Loader Switches (BA740-B9 Pedestal Enclosure)	2–21
2–3	Fail-Safe Loader Switches (BA744-A9 Rackmount Enclosure)	2–22
2–4	Power Supply LEDs (BA740-B9 Pedestal Enclosure)	2–24
2–5	Power Supply LED–DC OK (BA744-A9 Rackmount Enclosure)	2–25
2–6	Halt Button	2–27
2–7	StorageWorks Disk Drive LEDs (SCSI)	2–28
2–8	Floppy Drive Activity LED	2–28
2–9	CD–ROM Drive Activity LED	2–29
2–10	Power Supply Mode Jumper (W1) on the System Backplane (BA740-B9 Pedestal Enclosure)	2–32
2–11	Power Supply Mode Jumper (W1) on the PCI/EISA Backplane (BA744-A9 Rackmount Enclosure)	2–33
5–1	System Architecture: AlphaServer 2100A (BA740-B9 Enclosure)	5–3
5–2	System Architecture: AlphaServer 2100A RM and 2100A CAB (BA744-A9 Enclosure)	5–4
5–3	Device Name Convention	5–16
5–4	Card Cage and Bus Locations, Pedestal (BA740-B9)	5–27
5–5	Card Cages and Bus Locations, Rackmount (BA744-A9)	5–28
5–6	System Bus Configurations According to Number of CPUs, Pedestal (BA740-B9)	5–29
5–7	System Bus Configurations According to Number of CPUs, Rackmount (BA744-A9)	5–29

5–8	ISA and ISA Boards	5–32
5–9	PCI Board	5–38
5–10	Extending the Removable-Media Bus, Pedestal (BA740-B9) Systems	5–40
5–11	Internal StorageWorks Configuration (BA740-B9)	5–41
5–12	Alternative StorageWorks Bus Configuration (BA740-B9)	5–43
5–13	SCSI Cable Routing for Second Internal StorageWorks Shelf (BA740-B9)	5–44
5–14	Installing Removable Media, Pedestal (BA740-B9) Systems	5–46
5–15	Installing Hard-Disk Drives, Pedestal (BA740-B9)	5–48
5–16	Installing Removable Media, Rackmount (BA744-A9)	5–49
5–17	Installing a Hard-Disk Drive, Rackmount (BA744-A9)	5–50
5–18	Pedestal (BA740-B9) Power Supply Configurations	5–52
5–19	Pedestal (BA740-B9) W1 Redundant Power Jumper	5–53
5–20	Rackmount (BA744-A9) Power Supply Configurations	5–54
5–21	Rackmount (BA744-A9) W1 Redundant Power Jumper	5–55
6–1	FRUs, Front Left	6–5
6–2	FRUs, Rear Right	6–6
6–3	Removing Door and Panels	6–8
6–4	Fan/Removable Media Cable (12-Pin)	6–9
6–5	Floppy Drive Cable (34-Pin)	6–10
6–6	Internal StorageWorks Power Cable (5-Pin)	6–11
6–7	OCP Module Cable (10-Pin)	6–12
6–8	Power Cord	6–12
6–9	Remote I/O Cable (60-Pin)	6–14
6–10	SCSI Removable-Media Cable (50-Pin)	6–15
6–11	SCSI StorageWorks Cable (68-Pin)	6–16
6–12	Removing CPU Modules	6–18
6–13	Removing Fan Assembly	6–20
6–14	Removing Fan Component	6–21
6–15	Removing the Remote I/O Panel	6–23

6–16	Removing StorageWorks Drive	6–24
6–17	Removing Internal StorageWorks Shelf	6–25
6–18	Removing Internal StorageWorks Backplane	6–26
6–19	Removing Internal StorageWorks Terminator and Jumper	6–27
6–20	Removing Memory Modules	6–28
6–21	Removing Modules and Divider	6–29
6–22	Removing Power Supplies	6–30
6–23	Removing Backplane	6–31
6–24	System Backplane: Jumper, Switches, Connectors, and NVRAM Chip	6–32
6–25	System Backplane FSL Switches and Redundant Power Jumper	6–33
6–26	Removing OCP Cover	6–34
6–27	Removing OCP Module	6–35
6–28	Removing Power Supply	6–36
6–29	Removing Speaker	6–37
6–30	Removing a Removable-Media Drive	6–38
6–31	Removing Floppy Drive	6–39
7–1	FRUs, Upper Compartments	7–4
7–2	FRUs, Lower Compartment	7–5
7–3	Example of a Cabinet Stabilizer	7–7
7–4	Removing Front Panel	7–8
7–5	Sliding Out Rackmount System	7–9
7–6	Accessing the Mass Storage Compartment	7–10
7–7	Accessing the PCI/EISA Compartment	7–11
7–8	Accessing the System Bus Compartment	7–12
7–9	Floppy Drive Cable (34-pin)	7–13
7–10	Multinode Fan/Storage Device Cable (12-pin to 6-pin)	7–14
7–11	OCP Module Cable (10-pin)	7–15
7–12	Power Cord	7–16
7–13	Power Supply Control Cable Assembly (15-pin to 24-pin)	7–18
7–14	Power Supply 12V Cable Assembly (8-pin to 16-pin)	7–19
7–15	Remote I/O Cable (60-pin)	7–20
7–16	SCSI Storage-Media Cable (50-Pin)	7–21

7–17 Removing CPU Modules 7–24
7–18 Disconnecting Cables and Removing Fan Assembly . . . 7–26
7–19 Removing Fan Speed Control Board 7–27
7–20 Removing Remote I/O Screw at Rear Cutout and Removing Module 7–28
7–21 Removing Memory Modules 7–29
7–22 Removing OCP Module 7–30
7–23 Removing Power Supply Cables 7–32
7–24 Removing Power Supply 7–33
7–25 Removing Speaker 7–34
7–26 Removing Power Supply Cables from System Backplane 7–35
7–27 Removing Cable Bracket from Rear of System 7–36
7–28 Removing Enclosure from Cabinet 7–37
7–29 Separating Rackmount Enclosure 7–39
7–30 Lifting Off Rear Half 7–40
7–31 Removing Power Bus Bar 7–41
7–32 Separating System Bus and PCI/EISA Bus Compartments 7–42
7–33 Removing System Bus Backplane 7–43
7–34 Removing PCI/EISA Backplane 7–44
7–35 PCI/EISA Backplane: Jumper, Switches, Connectors, and NVRAM Chip 7–45
7–36 PCI/EISA Backplane FSL Switches and Redundant Power Jumper 7–46
7–37 Removing Fixed Disk Drives 7–47
7–38 Removing a Removable-Media Drive 7–48
7–39 Removing Floppy Drive 7–49

Tables

1–1 Diagnostic Table for Power Problems 1–3
1–2 Diagnostic Flow for Problems Getting to Console Mode 1–5
1–3 Diagnostic Flow for Problems Reported by the Console Program 1–6
1–4 Diagnostic Flow for Boot Problems 1–7

1–5	Diagnostic Flow for Errors Reported by the Operating System	1–8
2–1	Interpreting OCP Power-Up Display	2–3
2–2	EV4 Serial ROM Power-Up Countdown Description and Field Replaceable Units (FRUs)	2–4
2–3	EV5 Serial ROM Countdown Description and Field Replaceable Units (FRUs)	2–5
2–4	Fixed-Media Mass Storage Problems	2–13
2–5	Removable-Media Mass Storage Problems	2–14
2–6	Troubleshooting RAID Problems	2–15
2–7	PCI Troubleshooting	2–16
2–8	EISA Troubleshooting	2–17
2–9	Interpreting Power Supply LEDs	2–26
3–1	Summary of Diagnostic and Related Commands	3–2
4–1	AlphaServer Fault Detection and Correction	4–1
5–1	SRM-Only Console Tasks	5–6
5–2	Listing the ARC Firmware Device Names	5–7
5–3	ARC Firmware Device Names	5–10
5–4	ARC Firmware Environment Variables	5–10
5–5	Environment Variables Set During System Configuration	5–19
5–7	Summary of Procedure for Configuring EISA Bus (EISA Options Only)	5–36
5–8	Summary of Procedure for Configuring EISA Bus with ISA Options	5–37
6–1	BA740-B9 Enclosure FRUs	6–2
6–2	Power Cord Order Numbers	6–13
7–1	BA744-A9 Enclosure FRUs	7–2
7–2	Power Cord Order Numbers	7–17

Preface

This guide describes the procedures and tests used to service AlphaServer 2100A systems. The following models are included in this guide (see Figure 1):

- AlphaServer 2100A (BA740-B9 pedestal enclosure)
- AlphaServer 2100A RM (BA744-A9 rackmount enclosure)

Note

The AlphaServer 2100A CAB uses the BA744-A9 rackmount enclosure in the H9A10 (600 mm) cabinet. This guide covers service of the BA744-A9 enclosure only.

Figure 1 AlphaServer 2100A Systems Included in this Guide

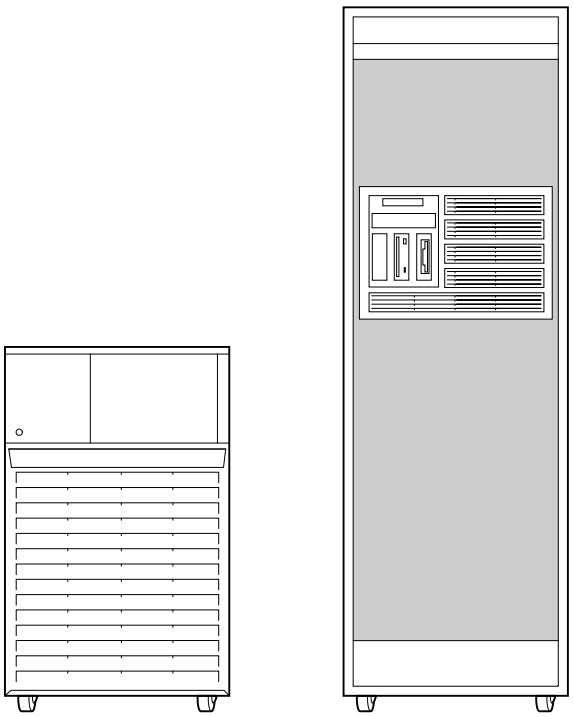

Intended Audience

This guide is intended for use by Digital Equipment Corporation service personnel and qualified self-maintenance customers.

Conventions

The following conventions are used in this guide.

Convention	Meaning
Return	A key name enclosed in a box indicates that you press that key.
Ctrl/*x*	Ctrl/*x* indicates that you hold down the Ctrl key while you press another key, indicated here by *x*. In examples, this key combination is enclosed in a box, for example, Ctrl/C.
Warning	Warnings contain information to prevent personal injury.
Caution	Cautions provide information to prevent damage to equipment or software.
Note	A note calls the reader's attention to any information that may be of special importance.
[ ]	In command format descriptions, brackets indicate optional elements.
console command abbreviations	Console command abbreviations must be entered exactly as shown.
`boot`	Console and operating system commands are shown in this special typeface.
italic type	Italic type in console command sections indicates a variable.
< >	In console mode online help, angle brackets enclose a placeholder for which you must specify a value.
{ }	In command descriptions, braces containing items separated by commas imply mutually exclusive items.

Related Documentation

- *AlphaServer 2100A Owner's Guide,* EK-2100A-OP
- *AlphaServer 2100A RM Installation/Owner's Guide,* EK-2100A-RM
- *H9A10 (600 mm) Cabinet Installation and Owner's Guide,* EK-H9A10-IN
- *AlphaServer 2000/2100/2100A Firmware Reference Guide,* EK-AXPFW-RM
- *DEC Verifier and Exerciser Tool User's Guide,* AA-PTTMD-TE
- *Guide to Kernel Debugging,* AA-PS2TD-TE
- *OpenVMS AXP System Dump Analyzer Utility Manual,* AA-PV6UB-TE
- *DECevent Translation and Reporting Utility for OpenVMS Alpha, User and Reference Guide,* AA-Q73KC-TE
- *DECevent Translation and Reporting Utility for Digital UNIX, User and Reference Guide* AA-QAA3A-TE

- *DECevent Analysis and Notification Utility for OpenVMS Alpha, User and Reference Guide,* AA-Q73LC-TE
- *DECevent Analysis and Notification Utility for Digital UNIX, User and Reference Guide* AA-QAA4A-TE
- *StorageWorks RAID Array 200 Subsystems Controller Installation and Standalone Configuration Utility User's Guide,* EK-SWRA2-IG

1
Troubleshooting Strategy

This chapter describes the troubleshooting strategy for AlphaServer 2100A systems.

- Section 1.1 provides questions to consider before you begin troubleshooting an AlphaServer 2100A system.
- Tables 1–1 through 1–5 provide a diagnostic flow for each of the categories of system problems.
- Section 1.2 lists the product tools and utilities.
- Section 1.3 lists available information services.

1.1 Troubleshooting the System

Before troubleshooting any system problem, check the site maintenance log for the system's service history. Be sure to ask the system manager the following questions:

- Has the system been used before and did it work correctly?
- Have changes to hardware or updates to firmware or software been made to the system recently? If so, are the revisions numbers compatible for the system? (Refer to the system and operating system release notes).
- What is the state of the system—is the operating system running?

  If the operating system is down and you are not able to bring it up, use the console environment diagnostic tools, such as the power-up/diagnostic displays and ROM-based diagnostics (RBDs).

  If the operating system is running, use the operating system environment diagnostic tools, such as the DECevent event management utility (to translate and interpret error logs), crash dumps, and exercisers (DEC VET).

1.1.1 Problem Categories

System problems can be classified into the following five categories. Using these categories, you can quickly determine a starting point for diagnosis and eliminate the unlikely sources of the problem.

1. Power problems (Table 1–1)
2. No access to console mode (Table 1–2)
3. Console-reported failures (Table 1–3)
4. Boot failures (Table 1–4)
5. Operating system-reported failures (Table 1–5)

Table 1–1 Diagnostic Table for Power Problems

Symptom	Action
AlphaServer 2100A (BA740-B9 Pedestal Enclosure)	
No AC power at system as indicated by AC OK LED on the power supply when the AC On/Off switch is set to ‘‘on.’’	• Check the power source and power cord. • Check that the left side panel is properly secured. A safety interlock switch shuts off power to the system if the panel is removed. • If there are two power supplies, make sure both have the AC On/Off switch set to ‘‘on.’’
AC power is present, but system does not power on.	Check the DC On/Off button setting on the operator control panel. Check that the ambient room temperature is within environmental specifications (10–35°C, 50–95°F) and reset the AC On/Off switch.
Power supply shuts down after approximately 5 seconds (fan failure).	Using a flashlight, look through the front (to the left of the internal StorageWorks shelf) to determine if the 6.75-inch fan is spinning at power-up. A failure of the 6.75-inch fan causes the system to shut down after approximately 5 seconds.

(continued on next page)

Table 1–1 (Cont.) Diagnostic Table for Power Problems

Symptom	Action
AlphaServer 2100A RM/CAB (BA744-A9 Rackmount Enclosure)	
Fans do not spin up when the AC power cable is plugged into the power supply.	• Check the power source and power cord. • If there are two power supplies, make sure both are plugged in.
AC power is present, as indicated by spinning fans, but system does not power on.	Check the DC On/Off button setting on the operator control panel. Note that the power supply LED, which indicates that DC voltages are within specified tolerances, does not check the -12V signal. Communications devices and other options that use -12V may fail due to a bad power supply. Check that the ambient room temperature is within environmental specifications (10–35°C, 50–95°F).
Power supply shuts down after approximately 5 seconds (fan failure).	Check to see if both 6.75-inch fans are operating. A failure of either 6.75-inch fan causes the system to shut down after approximately 5 seconds.

Table 1–2 Diagnostic Flow for Problems Getting to Console Mode

Symptom	Action
Power-up screen is not displayed.	Check power-up/diagnostic display on the OCP (Section 2.1) for a failure during self-tests.
	Check that keyboard and monitor are properly connected and powered on.
	If the power-up screen is not displayed, yet the system enters console mode when you press the Return key, check that the `console` environment variable is set correctly. If you are using a VGA monitor as the console terminal, the console variable should be set to ''graphics.'' If you are using a serial console terminal, the console variable should be set to ''serial.''
	If `console` is set to serial, the power-up screen is routed to the COM1 serial communication port (Section 5.10) and cannot be viewed from the VGA monitor.
	Try connecting a console terminal to the COM1 serial communication port (Section 5.10). If necessary use a MMJ-to-9-pin adapter (H8571-J). Check baud rate setting for console terminal and system. The system default baud rate setting is 9600 (Section 5.10). When using the COM1 port, you must set the `console` environment variable to ''serial.''
	If the system has a customized ''nvram'' file, try powering up with the Halt button set to the ''in'' position. The nvram file will not be executed when powering up with the Halt button depressed.
	For certain situations, power up using the fail-safe loader (Section 2.6) to bypass the power-up script and get to a low-level console. From the fail-safe loader console, you can edit the nvram file, set and examine environment variables, initialize drivers, or load new console firmware.

Table 1–3 Diagnostic Flow for Problems Reported by the Console Program

Symptom	Action
Power-up tests do not complete.	Use power-up/diagnostic display on the operator control panel (Section 2.1) and/or console terminal (Section 2.2) to determine error.
The system powers up to the ''ash>'' prompt.	Reinstall firmware. Refer to the procedure provided with the firmware update documentation.
Console program reports error: • OCP displays failure message at power-up • Halt button LED lights during power-up • Power-up screen includes error messages • Console prompt indicates a CPU failover (Section 2.2.1)	Use power-up/diagnostic display on the operator control panel (Section 2.1) and/or console terminal (Section 2.2) to determine error. Use the `show fru` (Section 3.3.3) and `show error` (Section 3.3.4) commands to see if errors have been logged and to examine error information contained in serial control bus EEPROMs. Examine the console event log (enter the `more el` command) or power-up screen (Section 2.2.2) to check for embedded error messages recorded during power-up. If power-up screen or console event log indicate problems with mass storage devices, or if storage devices are missing from the `show config` display, use the troubleshooting flow charts (Section 2.3) to determine the problem. If power-up screen or console event log indicate problems with EISA devices, or if EISA devices are missing from the `show config` display, use the troubleshooting flow chart (Section 2.5) to determine the problem. If power-up screen or console event log indicate problems with PCI devices, or if PCI devices are missing from the `show config` display, use the troubleshooting flow chart (Section 2.4) to determine the problem. Run RBD tests (Section 3.1) to verify problem.

Table 1–4 Diagnostic Flow for Boot Problems

Symptom	Action
System cannot find boot device.	Check system configuration for correct device parameters (node ID, device name, and so on). • For Digital UNIX and OpenVMS, use `show config` and `show device` (Section 5.1). • For Windows NT, use the Display Hardware Configuration display and the Set Default Environment Variables display (Section 5.1). Check the system configuration for correct environment variable settings. • For Digital UNIX and OpenVMS, examine the auto_action, bootdef_dev, boot_osflags, and os_type environment variables (Section 5.1.4.4). For problems booting over a network, check the ew*0_protocols environment variable setting: Systems booting from a Digital UNIX server should be set to bootp; systems booting from an OpenVMS server should be set to mop (Section 5.1.4.4). • For Windows NT, examine the FWSEARCHPATH, AUTOLOAD, and COUNTDOWN environment variables (Section 5.1.3.2).
Device does not boot.	Check that the Halt button is not set to ''in'' (depressed). If bugcheck errors are generated while attempting to boot from an EISA device on systems running OpenVMS V6.1 or earlier, make sure that the bus_probe_algorithm environment variable is set to ''old.'' For problems booting over a network, check the ew*0_protocols environment variable setting: Systems booting from a Digital UNIX server should be set to bootp; systems booting from an OpenVMS server should be set to mop (Section 5.1.4.4). Run device tests (Section 3.1) to check that boot device is operating.

Table 1–5 Diagnostic Flow for Errors Reported by the Operating System

Symptom	Action
System is hung or has crashed.	Examine the crash dump file.
	Refer to *OpenVMS AXP System Dump Analyzer Utility Manual* (AA-PV6UB-TE) for information on how to interpret OpenVMS crash dump files.
	Refer to the *Guide to Kernel Debugging* (AA–PS2TD–TE) for information on using the Digital UNIX Krash Utility.
	Use the `show error` command (Section 3.3.4) to examine error information contained in serial control bus EEPROMs (console environment error log).
Errors have been logged and the Operating system is up.	Examine the operating system error log files to isolate the problem (Chapter 4).
	If the problem occurs intermittently, run an operating system exerciser, such as DEC VET, to stress the system.
	Refer to the *DEC Verifier and Exerciser Tool User's Guide* (AA–PTTMD–TE) for instructions on running DEC VET.

1.2 Service Tools and Utilities

This section lists the array of service tools and utilities available for acceptance testing, diagnosis, and serviceability and provides recommendations for their use.

Error Handling/Logging Tools

Digital UNIX, OpenVMS, and Microsoft Windows NT operating systems provide recovery from errors, fault handling, and event logging. The DECevent management utility provides bit-to-text translation of event logs for interpretation for Digital UNIX and OpenVMS.

RECOMMENDED USE: Analysis of error logs is the primary method of diagnosis and fault isolation. If the system is up, or you are able to bring it up, look at this information first. Refer to Chapter 4 for information on using error logs to isolate faults.

ROM-Based Diagnostics (RBDs)

Many ROM-based diagnostics and exercisers are embedded in AlphaServer 2100A systems. ROM-based diagnostics execute automatically at power-up and can be invoked in console mode using console commands.

RECOMMENDED USE: ROM-based diagnostics are the primary means of testing the console environment and diagnosing the CPU, memory, Ethernet, I/O buses, and SCSI and DSSI subsystems. Use ROM-based diagnostics in the acceptance test procedures when you install a system, add a memory module, or replace the following: CPU module, memory module, system backplane, I/O bus device, or storage device. Refer to Chapter 3 for information on running ROM-based diagnostics.

Loopback Tests

Internal and external loopback tests are used to isolate a failure by testing segments of a particular control or data path. The loopback tests are a subset of the ROM-based diagnostics.

RECOMMENDED USE: Use loopback tests to isolate problems with the COM2 serial port, the parallel port, and Ethernet controllers. Refer to Chapter 3 for instructions on performing loopback tests.

Firmware Console Commands

Console commands are used to set and examine environment variables and device parameters, as well as to invoke ROM-based diagnostics and exercisers. For example, the `show memory`, `show configuration`, and `show device` commands are used to examine the configuration; the `set` (bootdef_ dev, auto_action, and boot_osflags) commands are used to set environment variables; and the `cdp` command is used to configure DSSI parameters.

RECOMMENDED USE: Use console commands to set and examine environment variables and device parameters and to run RBDs. Refer to Section 5.1 for information on configuration-related firmware commands and Chapter 3 for information on running RBDs.

Operating System Exercisers (DEC VET)

The Digital Verifier and Exerciser Tool (DEC VET) is supported by the Digital UNIX, OpenVMS, and Windows NT operating systems. DEC VET performs exerciser-oriented maintenance testing of both hardware and operating system.

RECOMMENDED USE: Use DEC VET as part of acceptance testing to ensure that the CPU, memory, disk, tape, file system, and network are interacting properly. Also use DEC VET to stress test the user's environment and configuration by simulating system operation under heavy loads to diagnose intermittent system failures.

Crash Dumps

For fatal errors, such as fatal bugchecks, Digital UNIX and OpenVMS operating systems will save the contents of memory to a crash dump file.

RECOMMENDED USE: Crash dump files can be used to determine why the system crashed. To save a crash dump file for analysis, you need to know proper system settings. Refer to the *OpenVMS AXP System Dump Analyzer Utility Manual* (AA-PV6UB-TE) or the *Guide to Kernel Debugging* (AA–PS2TD–TE) for Digital UNIX.

Recommended System Installation

The recommended system installation includes:

1. Hardware installation and acceptance testing. Acceptance testing includes running the `test` command.
2. Software installation and acceptance testing. For example, using Factory Installed Software (FIS), and then acceptance testing with DEC VET.

1.3 Information Services

Several information resources are available, including online information for servicers and customers, computer-based training, and maintenance documentation database services. A brief description of some of these resources follows.

Fast Track Service Help File

The information contained in this guide, including the field-replaceable unit (FRU) procedures and illustrations, is available in online format. You can download the hypertext file (A2100A-S.HLP) or a self-extracting .HLP file from TIMA, or order the diskettes (AK-QQ1PA-CA and AK-QQ1QA-CA) or the AlphaServer 2100A Maintenance Kit (QZ-00TAD-GC, for rackmount systems; QZ-00TAB-GC, for pedestal systems). The maintenance kit includes hardcopy, diskettes, and illustrated parts breakdown.

Alpha Firmware Updates

Under certain circumstances, such as a CPU upgrade or replacement of the system backplane, you need to update your system firmware. An Alpha Firmware CD–ROM is shipped on an ‘‘as released’’ basis with Digital UNIX, OpenVMS, and Windows NT operating systems. The Alpha firmware files can also be downloaded from the Internet as follows:

- ftp://ftp.digital.com/pub/Digital/Alpha/firmware/
- http://www.service.digital.com/alpha/server/firmware/

New versions of firmware released between shipments of the Alpha Firmware CD–ROM are available in an interim directory:

ftp://ftp.digital.com/pub/Digital/Alpha/firmware/interim/

ECU Revisions

The EISA Configuration Utility (ECU) is used for configuring EISA options on AlphaServer systems. Systems are shipped with an ECU kit, which includes the ECU license. Customers who already have the ECU and license, but need the latest revision of the ECU, can order a separate kit. Call 1-800-DIGITAL to order.

If the customer plans to migrate from Digital UNIX or OpenVMS to Windows NT, you must re-run the appropriate ECU. Failure to run the operating-specific ECU will result in system failure.

OpenVMS Patches

Software patches for the OpenVMS operating system are available from the World Wide Web as follows:

http://www.service.digital.com/html/patch_service.html

Chose the ‘‘Contract Access’’ option if you have a valid software contract with Digital or you wish to become a software contract customer. Choose the ‘‘Public Access’’ options if you do not have a software service contract.

Late-Breaking Technical Information

You can download up-to-date files and late-breaking technical information from the Internet for managing AlphaServer 2100A systems.

- FTP address:

  ```
  ftp.digital.com
  cd /pub/Digital/Alpha/systems
  ```

- World Wide Web address:

  ```
  http://www.service.digital.com/alpha/server/
  ```

The information includes firmware updates, the latest configuration utilities, software patches, lists of supported options, Wide SCSI information and more.

Supported Options

Refer to the *AlphaServer 2100A Supported Options List* for a list of options supported under Digital UNIX, OpenVMS, and Windows NT. The options list is available from the Internet as follows:

- FTP address:

  `ftp://ftp.digital.com/pub/Digital/Alpha/systems/as2100/docs/`

- World Wide Web address:

  `http://www.service.digital.com/alpha/server/as2100/ docs.html`

You can obtain information about hardware configurations for the AlphaServer 2100A from the *Digital Systems and Options Catalog*. The catalog is regularly published to assist in ordering and configuring systems and hardware options. Each printing of the catalog presents all of the products that are announced, actively marketed, and available for ordering.

Access printable Postscript files of any section of the catalog from the Internet as follows (Be sure to check the Readme file):

ftp://ftp.digital.com/pub/Digital/info/SOC/)

Training

Computer Based Training (CBT) and lecture lab courses are available from the Digital training center:

- AlphaServer 2100 Installation and Troubleshooting: EY-M915E
- Alpha Concepts
- DSSI Concepts: EY-9823E
- ISA and EISA Bus Concepts: EY-I113E-P0
- RAID Concepts: EY-N935E
- SCSI Concepts and Troubleshooting: EY-P841E, EY-N838E

Digital Assisted Services

Digital Assisted Services (DAS) offers products, services, and programs to customers who participate in the maintenance of Digital computer equipment. Components of Digital assisted services include:

- Spare parts and kits
- Diagnostics and service information/documentation
- Tools and test equipment
- Parts repair services, including Field Change Orders

2

Power-Up Diagnostics and Displays

This chapter provides information on how to interpret the power-up/diagnostic display on the operator control panel and console screen. In addition, a description of the power-up and firmware power-up diagnostics is provided as a resource to aid in troubleshooting.

- Section 2.1 describes how to interpret the power-up/diagnostic display on the operator control panel.
- Section 2.2 describes how to interpret the power-up screen.
- Section 2.3 describes how to troubleshoot mass-storage problems indicated at power-up or storage devices missing from the `show config` display.
- Section 2.5 describes how to troubleshoot EISA bus problems indicated at power-up or EISA devices missing from the `show config` display.
- Section 2.4 describes how to troubleshoot PCI bus problems indicated at power-up or PCI devices missing from the `show config` display.
- Section 2.6 describes the use of the fail-safe loader.
- Section 2.7 describes how to interpret system LEDs.
- Section 2.8 describes the power-up sequence.
- Section 2.9 describes power-on self-tests.

2.1 Interpreting the Power-Up Display

The power-up/diagnostic display on the operator control panel (OCP) (Figure 2–1) displays the progress and result of self-tests during power-up.

The OCP power-up display is the primary diagnostic tool for troubleshooting ‘‘No Access to Console Mode’’ problems.

Figure 2–1 Operator Control Panel Power-Up/Diagnostic Display

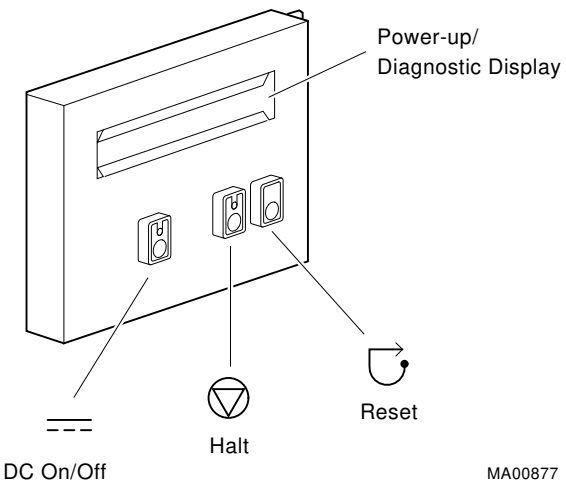

Refer to Tables 2–1, 2–2, and 2–3 for information on interpreting the display.

Table 2–1 Interpreting OCP Power-Up Display

Message	Meaning
TEST	Displayed while system performs diagnostic tests and exercisers. The type of module under test, its slot number, and the currently executing test number are also displayed.
NO MEM INSTALLED	Displayed if you power up with no memory installed.
FAIL module_type	If an error is detected in the CPU, memory, or I/O, a failure message is displayed and the Halt button LED lights for a few seconds. The error is logged to the appropriate module via the serial control bus. In nearly all cases, the power-up tests continue. The module_type and slot number for the field replaceable unit (FRU) that failed, along with the countdown number (Table 2–2 and Table 2–3) that detected the error are also displayed. Module types and slot numbers: CPU_nn — CPU module (0–3) MEM_nn — Memory module (0–3) I/O_0 — System backplane
CPU STATUS	Summary of CPU testing—The status of each CPU, starting with CPU0 is displayed: ''P'' — CPU passed ''F'' — CPU failed ''–'' — CPU not present
STARTING CPU #	The console is starting the primary CPU.
CONSOLE STARTED	The console has been unloaded from flash ROM and has assumed control of the system.
TEST MEM BANK #	The console is testing memory.
PROBE I/O SUBSYS	The console is checking the PCI and EISA bridges.
SYSTEM RESET	The Reset button has been pressed.
Model n/nnn	When system is under operating system control, the CPU variant (*n*) and the approximate CPU speed (*nnn*) are displayed unless you supply your own text using the ocp_ text environment variable.

(continued on next page)

Table 2–1 (Cont.) Interpreting OCP Power-Up Display

Message	Meaning
Additional EV5-Only Processor OCP Messages	
21164 TIMEOUT	An Alpha 21164 microprocessor IBOX time-out occurred.
3.3V/CLOCK FAIL	A voltage or clock failure occurred on the CPU module.
MEM_nn NVR ERROR	A checksum error occurred in the memory EEROM.

Table 2–2 EV4 Serial ROM Power-Up Countdown Description and Field Replaceable Units (FRUs)

Countdown Number	Description	Likely FRU
95	SROM unloaded, sync byte sent to the DECchip 21064 processor	CPU
91	Sync byte received from the DECchip 21064 processor	CPU
8d	First backup cache initialization	CPU
89	Backup cache data line test	CPU
85	Backup cache graycode test	CPU
81	DECchip 21064 processor ECC generation test	CPU
7d	Backup cache tag store test	CPU
79	I/O tests: system bus, PCI bus, EISA bus	CPU, system backplane (PCI/EISA backplane for rackmount)[1]
75	Second backup cache initialization	CPU
0c	End of initial test sequence (CPU and all buses good)	CPU
18	Memory 0	MEM
16	Memory 1	MEM
14	Memory 2	MEM
12	Memory 3	MEM
07-CPU#	End of memory test (32 MB)	MEM

(continued on next page)

Table 2–2 (Cont.) EV4 Serial ROM Power-Up Countdown Description and Field Replaceable Units (FRUs)

Countdown Number	Description	Likely FRU
06	Start ESC configuration	I/O_0
05	End of ESC config/start FEPROM unload	I/O_0
04	End of FEPROM unload/start checking	I/O_0
03	End of checking, jump to unloaded console	I/O_0

(1) Use the `show error cpu` command to isolate the failing FRU. If an error log indicates that the CPU failed test number 7, the CPU module is faulty.

If no error is logged for test number 7, the backplane is the likely module at fault.

For rackmount systems, which have a system bus backplane and PCI/EISA backplane, the PCI/EISA backplane, which contains more components, is more likely to fail than the system bus backplane that contains the T3 (system bus to PCI bus bridge chip).

Table 2–3 EV5 Serial ROM Countdown Description and Field Replaceable Units (FRUs)

Countdown Number				Description	Likely FRU
CPU0	CPU1	CPU2	CPU3		
F8	F9	A	FB	Serial control bus read error	CPU
F4	F5	F6	F7	EEROM checksum error	CPU
F0	F1	F2	F3	EV5 IBOX timeout	CPU
EC	ED	EE	EF	DC_OK Fail	CPU
D4	D5	D6	D7	No memory present	Memory is missing
D0	D1	D2	D3	Memory EEROM checksum error	MEM
CC	CD	CE	CF	CPU disabled	CPU
C8	C9	CA	CB	EV5 BIST failed	CPU
C4	C5	C6	C7	EV5 BIST errors	CPU

(continued on next page)

Table 2–3 (Cont.) EV5 Serial ROM Countdown Description and Field Replaceable Units (FRUs)

Countdown Number				Description	Likely FRU
CPU0	CPU1	CPU2	CPU3		
BC	BD	BE	BF	652/654 power-on & run	Non-specific /Status message
B8	B9	BA	BB	Sent sync byte	Non-specific /Status message
B4	B5	B6	B7	Received sync byte	Non-specific /Status message
60	61	62	63	B-cache init	CPU
5C	5D	5E	5F	S-cache data march test	CPU
58	59	5A	5B	S-cache TAG march test	CPU
54	55	56	57	B-cache data march test	CPU
50	51	52	53	B-cache TAG march test	CPU
4C	4D	4E	4F	B-cache DT-TAG test	CPU
48	49	4A	4B	System bus, PCI, EISA test	CPU or MBD[1]
44	45	46	47	S-cache, B-cache, and rattler init	CPU
40	41	42	43	End of initial test	Non-specific /Status message
28	[29]	[2A]	[2B]	Memory test bank 0	MEM
24	[25]	[26]	[27]	Memory test bank 1	MEM
20	[21]	[22]	[23]	Memory test bank 2	MEM
1C	[1D]	[1E]	[1F]	Memory test bank 3	MEM
18	[19]	[1A]	[1B]	PCI bridge test	MBD
14	[15]	[16]	[17]	End of memory/bridge test	Non-specific /Status message
–	11	12	13	Spin on CPU PMBR	Non-specific /Status message
0C	[0D]	[0E]	[0F]	Start ESC config	MBD
08	[09]	[0A]	[0B]	End ESC config & start FEPROM unload	MBD

(continued on next page)

Table 2–3 (Cont.) EV5 Serial ROM Countdown Description and Field Replaceable Units (FRUs)

Countdown Number				Description	Likely FRU
CPU0	CPU1	CPU2	CPU3		
04	[05]	[06]	[07]	End of FEPROM unload & start checksum	MBD
00	[01]	[02]	[03]	End of checksum & Jump to console	MBD

(1) Use the `show error cpu` command to isolate the failing FRU. If an error log indicates that the CPU failed test number 7, the CPU module is faulty.

If no error is logged for test number 7, the backplane is the likely module at fault.

For rackmount systems, which have a system bus backplane and PCI/EISA backplane, the PCI/EISA backplane, which has more components, is more likely to fail than the system bus backplane that contains the T3 (system bus to PCI bus bridge chip).

2.2 Power-Up Screen

During power-up self-tests the test status and result are displayed on the console terminal. Information similar the following should be displayed on the screen.

```
VMS PALcode X5.48-112, OSF PALcode X1.35-81
starting console on CPU 0
Testing Memory bank 0
Testing Memory bank 1
Testing Memory bank 2
Testing Memory bank 3
Configuring Memory Modules
probing hose 0, PCI
probing PCI-to-PCI bridge, bus 1
probing PCI-to-PCI bridge, bus 2
bus 1, slot 1 -- pka -- NCR 53C810
bus 2, slot 0 -- ewa -- DECchip 21040-AA
bus 2, slot 1 -- pkb -- QLogic ISP1020
bus 2, slot 2 -- pkc -- QLogic ISP1020
bus 0, slot 8 -- vga -- S3 Trio64/Trio32
probing hose 1, EISA
starting console on CPU 1
Memory Testing and Configuration Status
Module   Size    Base Addr   Intlv Mode  Intlv Unit  Status
------   -----   ---------   ----------  ----------  ------
  0      128MB   00000000      1-Way         0       Passed
Total Bad Pages 0
Testing the System
Testing the Disks (read only)
Testing the Network
AlphaServer 2100A Console V4.3-130, built on Oct 26 1995 at 19:44:57
P00>>>
```

Digital UNIX or OpenVMS Systems

Digital UNIX and OpenVMS are supported by the SRM firmware (see Section 5.1.1). The SRM console prompt is shown below:

```
P00>>>
```

Note

For systems with multiple CPUs, if CPU0 failed during power-up tests, or has an error logged to its EEPROM, the system will ‘‘failover’’ to another CPU. The CPU number of the CPU serving as the primary CPU is displayed in the SRM prompt; for example, `P01>>>` or `P02>>>`, and so on.

Windows NT Systems

Windows NT is supported by the ARC firmware (see Section 5.1.1). Systems using Windows NT power up to the ARC boot menu.

```
ARC Multiboot Alpha AXP Version n.nn
Copyright (c) 1995 Microsoft Corporation
Copyright (c) 1995  Digital Equipment Corporation

Boot menu:

   Boot Windows NT
   Boot an alternate operating system
   Run a program
   Supplementary menu...

Use the arrow keys to select, then press Enter.
```

2.2.1 Multiprocessor Failover

AlphaServer 2100A systems support multiprocessor failover, which allows the system to power up and boot the operating system even if only one CPU is working.

During power-up or system reset, the serial ROM tests check for a good CPU, starting with CPU0, to serve as the primary CPU. The primary CPU is the only CPU that tests memory and reads the flash ROM code. If a CPU fails serial ROM tests, or if the CPU has an error logged to its serial control bus EEPROM, that CPU is disabled. The lowest numbered passing CPU serves as the primary CPU. If all CPU modules fail their power-up diagnostics, then CPU0 will serve as the primary CPU.

If any of the CPUs fail during power-up, the halt button LED on the operator control panel lights for a few seconds and the CPU status message on the power-up/diagnostic display indicates which CPU failed (Table 2–1).

Note

The CPU number of the CPU serving as the primary CPU is displayed in the SRM prompt; for example, `P01>>>` or `P02>>>`, and so on.

The following firmware commands can also be used to determine if a CPU failed power-up tests.

- `show fru` (Chapter 3)
- `show error` (Chapter 3)
- `show config` (Chapter 5)

2.2.2 Console Event Log

AlphaServer 2100A systems maintain a console event log consisting of status messages received during power-on self-tests. If problems occur during power-up, standard error messages indicated by asterisks (***) may be embedded in the console event log. To display a console event log, use the `cat el` or `more el` command at the SRM console prompt.

Note

To stop the screen display from scrolling, enter Ctrl/S. To resume scrolling, enter Ctrl/Q.

You can also use the command, `more el`, to display the console event log one screen at a time.

The following examples show abbreviated console event logs that contain standard error messages:

❶ The first indicates a problem with the mouse driver.

❷ The second indicates that the Ethernet loopback test failed (possibly the result of a missing terminator or disconnection from a live network).

❸ The third indicates a failing memory module, MEM0.

```
P00>>> more el
starting console on CPU 0
initialized idle PCB
initializing semaphores
initializing heap
   .
   .
   .
CPU 0 speed is 5.26 ns (190MHz)
access NVRAM
entering idle loop
Starting Memory Diagnostics
   .
   .
   .
initializing keyboard
** no mouse interrupts received **  ❶
   .
   .
   .
Change mode to Internal loopback.

*** Error (ewa0), Mop loop message timed out from: 08-00-2b-3d-63-10  ❷

*** List index: 0 received count: 0 expected count 1
   .
   .
   .
Change to Normal Operating Mode.
P00>>>

P00>>> cat el
starting console on CPU 0
initialized idle PCB
initializing semaphores
   .
   .
   .
Testing 1st 2MB(s) on memory module 0


***Error - Memory Board 0 ***  ❸
Failing address:     00000020
Bank Number:         0
ASIC ID:             1
Error Type:          0
Error Syndrome:      00000710
   .
   .
   .
P00>>>
```

2.3 Mass Storage Problems Indicated at Power-Up

Mass storage failures at power-up are usually indicated by read fail messages. Other problems are indicated by storage devices missing from the `show config` display.

- Table 2–4 provides information for troubleshooting fixed-media mass storage problems indicated at power-up or storage devices missing from the `show config` display.
- Table 2–5 provides information for troubleshooting removable-media storage problems indicated at power-up or storage devices missing from the `show config` display.
- Table 2–6 provides troubleshooting tips for AlphaServer systems that use the RAID Array 200 Subsystem.

Use Tables 2–4, 2–5, and 2–6 to diagnose the likely cause of the problem.

Table 2–4 Fixed-Media Mass Storage Problems

Problem	Symptom	Corrective Action
Drive failure	Fault LED for drive is on (steady).	Replace drive.
Duplicate SCSI IDs	Drives with duplicate SCSI IDs are missing from the `show config` display.	Correct drive SCSI IDs.
SCSI ID set to 7 (reserved for host ID)	Valid drives are missing from the `show config` display. One drive may appear seven times on the configuration screen display.	Correct SCSI IDs.
Duplicate host IDs on a shared bus	Valid drives are missing from the `show config` display. One drive may appear seven times on the configuration screen display.	Change host ID through the pk*0_host_id environment variable (`set pk*0_host_id`, Section 5.1.4.4), for systems running OpenVMS or Digital UNIX (SRM console). For systems running Windows NT (ARC console), choose ‘‘Set default configuration’’ in the Setup Menu.
Extra terminator	Devices produce errors or device IDs are dropped.	Check that bus is terminated only at beginning and end. Remove unnecessary terminators.
PCI or EISA storage adapter option failure	Problems persist after eliminating the above problem sources.	Replace storage adapter module.

Table 2–5 Removable-Media Mass Storage Problems

Problem	Symptom	Corrective Action
Drive failure	Fault LED for drive is on (steady).	Replace drive.
Duplicate SCSI IDs	Drives with duplicate SCSI IDs are missing from the `show config` display.	Correct SCSI IDs. Check for extra terminator.
SCSI ID set to 7 (reserved for host ID)	Valid drives are missing from the `show config` display. One drive may appear seven times on the `show config` display.	Correct SCSI IDs.
Duplicate host IDs on a shared bus	Valid drives are missing from the `show config` display. One drive may appear seven times on the configuration screen display.	Change host ID through the pk*0_host_id environment variable (`set pk*0_host_id`, Section 5.1.4.4), for systems running OpenVMS or Digital UNIX (SRM console). For systems running Windows NT (ARC console), choose ‘‘Set default configuration’’ in the Setup Menu.
Missing or loose cables	Activity LEDs do not come on. Drive missing from the `show config` display.	Remove device and inspect cable connections.
Missing internal terminator	Read/write errors in console event log; storage adapter port may fail.	Check that cable terminator (12-36929-01) is installed at end of SCSI bus.
Extra terminator	Devices produce errors or device IDs are dropped.	Check that cable terminator (12-36929-01) is removed if bus cable is connected to the internal StorageWorks shelf.
Backplane failure	Problems persist after eliminating the above problem sources.	Replace system backplane (pedestal systems); PCI /EISA backplane (rackmount systems).

Table 2–6 provides troubleshooting hints for AlphaServer 2100A systems that have the StorageWorks RAID Array 200 Subsystem. The RAID subsystem includes either the KZESC-*xx* (SWXCR-E*x*) or the KZPSC-*xx* (SWXCR-P*x*) PCI backplane RAID controller.

Table 2–6 Troubleshooting RAID Problems

Symptom	Action
Some RAID drives do not appear on the `show device d` display.	Valid configured RAID logical drives will appear as DRA0–DRA*n*, not as DK*n*. Configure the drives by running the RAID Configuration Utility (RCU), following the instructions in the *StorageWorks RAID Array 200 Subsystems Controller Installation and Standalone Configuration Utility User's Guide*, EK-SWRA2-IG. Reminder: several physical disks can be grouped as a single logical DRA*n* device.
Drives on the SWXCR controller power up with the amber Fault light on.	Whenever you move drives onto or off of the controller, run the RAID Configuration Utility to set up the drives and logical units. Follow the instructions in the *StorageWorks RAID Array 200 Subsystems Controller Installation and Standalone Configuration Utility User's Guide*, EK-SWRA2-IG.
Cannot access disks connected to the RAID subsystem on Windows NT systems.	On Windows NT systems, disks connected to the controller must be spun up before they can be accessed. While running the ECU, verify that the controller is set to spin up two disks every six seconds. This is the default setting if you are using the default configuration files for the controller. If the settings are different, adjust them as needed.

2.4 PCI Bus Problems Indicated at Power-Up

PCI bus failures at power-up are usually indicated by the inability of the system to see the device. Table 2–7 provides a table for troubleshooting PCI bus problems. Use the table to diagnose the likely cause of the problem.

Table 2–7 PCI Troubleshooting

Step	Action
1	Confirm that the PCI module and any cabling are properly seated.
2	Run ROM-based diagnostics for the type of option: • Storage adapter—Run `exer_read` to exercise the storage devices off the PCI controller option (Section 3.3.6). • Ethernet adapter—Run `nettest` to exercise an Ethernet adapter (Section 3.3.9).
3	Check for bad slot by moving the last installed controller to a different slot.
4	Call option manufacturer or support for help.

2.5 EISA Bus Problems Indicated at Power-Up

EISA bus failures at power-up are usually indicated by the following messages displayed during power-up:

```
EISA Configuration Error. Run the EISA Configuration Utility.
```

Run the EISA Configuration Utility (ECU) (Section 5.4) when this message is displayed. Other problems are indicated by EISA devices missing from the `show config` display.

Table 2–8 provides a table for troubleshooting EISA bus problems that persist after you run the ECU.

Table 2–8 EISA Troubleshooting

Step	Action
1	Confirm that the EISA module and any cabling are properly seated.
2	Run the ECU to: • Confirm that the system has been configured with the most recently installed controller. • See what the hardware jumper and switch setting should be for each ISA controller. • See what the software setting should be for each ISA and EISA controller. • See if the ECU deactivated (<>) any controllers to prevent conflict. • See if any controllers are locked (!), which limits the ECU's ability to change resource assignments.
3	Confirm that hardware jumpers and switches on ISA controllers reflect the settings indicated by the ECU. Start with the last ISA module installed.
4	Run ROM-based diagnostics for the type of option: • Storage adapter—Run `exer_read` to exercise the storage devices off the EISA controller option (Section 3.3.6). • Ethernet adapter—Run `nettest` to exercise an Ethernet adapter (Section 3.3.9).
5	Check for bad slot by moving the last installed controller to a different slot.
6	Call option manufacturer or support for help.

2.5.1 Additional EISA Troubleshooting Tips

The following tips can aid in isolating EISA bus problems.

- Peripheral device controllers need to be seated (inserted) carefully, but firmly, into their slot to make all necessary contacts. Improper seating is a common source of problems for EISA modules.
- Be sure you run the correct version of ECU for the operating system. For Windows NT, use ECU diskette DECpc AXP (AK-PYCJ*-CA); for Digital UNIX and OpenVMS, use ECU diskette DECpc AXP (AK-Q2CR*-CA).
- The CFG files supplied with the option you want to install may not work on AlphaServer 2100A systems. Some CFG files call overlay files that are not required on this system or may reference inappropriate system resources, for example, BIOS addresses. Contact the option vendor to obtain the proper CFG file.

- Peripherals cannot share direct memory access (DMA) channels. Assignment of more than one peripheral to the same DMA channel can cause unpredictable results or even loss of function of the EISA module.
- Systems running Windows NT can assign shared interrupt lines (IRQs). Digital UNIX and OpenVMS do not allow shared interrupts.
- Not all EISA products work together. EISA is an open standard, and not every EISA product or combination of products can be tested. Violations of specifications may matter in some configurations, but not in others.

  Manufacturers of EISA options often test the most common combinations and may have a list of ISA and EISA options that do not function in combination with particular systems. Be sure to check the documentation or contact the option vendor for the most up-to-date information.
- EISA options will not function unless they are first configured using the ECU.
- The ECU will not notify you if the configuration program diskette is write-protected when it attempts to write the system configuration file (system.sci) to the diskette.

2.6 Fail-Safe Loader

The fail-safe loader (FSL) is a redundant or backup ROM that allows you to power up without initializing drivers or running power-up diagnostics.

Note

The fail-safe loader should be used only when a failure at power-up prohibits you from getting to the console program. You cannot boot an operating system from the fail-safe loader.

If a checksum error is detected when the SRM console is loading at power-up, the fail-safe loader is automatically loaded into memory and the system displays the FSL prompt `ash>`. If the system automatically powers up to the `ash>` prompt, reinstall the console firmware, using the latest firmware update media.

Whenever the fail-safe loader console is activated, the power-up/diagnostic display on the operator control panel displays a FAIL I/O_00 message.

The FSL permits you to get to a console, with limited functionality, when one of the following is the cause of a problem getting to the console program under normal power-up:

- A checksum error is detected when the SRM console is loading at power-up (corrupted firmware).
- A hardware or power failure, or accidental power down during a firmware upgrade occurred.
- A configuration error, such as an incorrect environment variable setting or an inappropriate nvram script.
- A driver error at power-up.

Note

The FSL program, indicated by the `ash>` prompt, has limited functionality. A simple shell is indicated by the letters ‘‘ash’’ contained in the console prompt.

2.6.1 Fail-Safe Loader Functions

From the FSL console `ash` prompt, you can:

- Update or load new console firmware
- Edit the nvram file (using the `edit` command)
- Assign a correct value to an environment variable (using the `show` and `set` commands)
- Start individual drivers using the `init -driver ew` command to start the MOP driver or `init -driver dv` to start the floppy driver. The `init -driver 6` command in FSL mode starts all available drivers.

Note

The nonvolatile file, nvram, is shipped from the factory with no contents. The customer can use the `edit` command to create a customized script or command file that is executed as the last step of every power-up. Refer to the *AlphaServer 2000/2100/2100A Firmware Reference Guide*.

To initialize all available drivers and boot firmware, enter the following commands. Substitute the name of the update file for the variable *update_file*.

```
ash> init -driver 6
ash> boot update_file
```

Caution

If you have manually activated the FSL by setting the FSL enable switch on the system backplane (pedestal systems) or PCI/EISA backplane (rackmount systems), you must set the FSL enable switch to ‘‘off’’ before performing the firmware update.

When you perform a system upgrade, such as replacing existing CPUs with faster CPUs, or replace a system backplane (pedestal systems) or PCI/EISA backplane (rackmount systems), you should update the fail-safe loader. This is to ensure that the FSL will support the new CPUs installed during the upgrade, or in the case of replacing a backplane, to load the FSL console, which is not preloaded on the replacement backplanes.

Instructions on updating the FSL are provided with system upgrade kits and with replacement backplanes.

2.6.2 Activating the Fail-Safe Loader

To activate the FSL:

1. Make sure the system is off and locate the two FSL switches on the backplane (system backplane for pedestal systems, Figure 2–2; PCI/EISA backplane for rackmount systems, Figure 2–3).
2. Using a small flat implement, set the FSL enable switch to ‘‘ON’’. The default is ‘‘OFF’’.
3. Turn on the system.
4. Use the FSL console (`ash>`) to update or load new console firmware, edit the nvram file, set environment variables, or initialize phase 6 drivers.
5. When you have finished, power down the system and set the FSL enable switch to ‘‘OFF’’.

Figure 2–2 Fail-Safe Loader Switches (BA740-B9 Pedestal Enclosure)

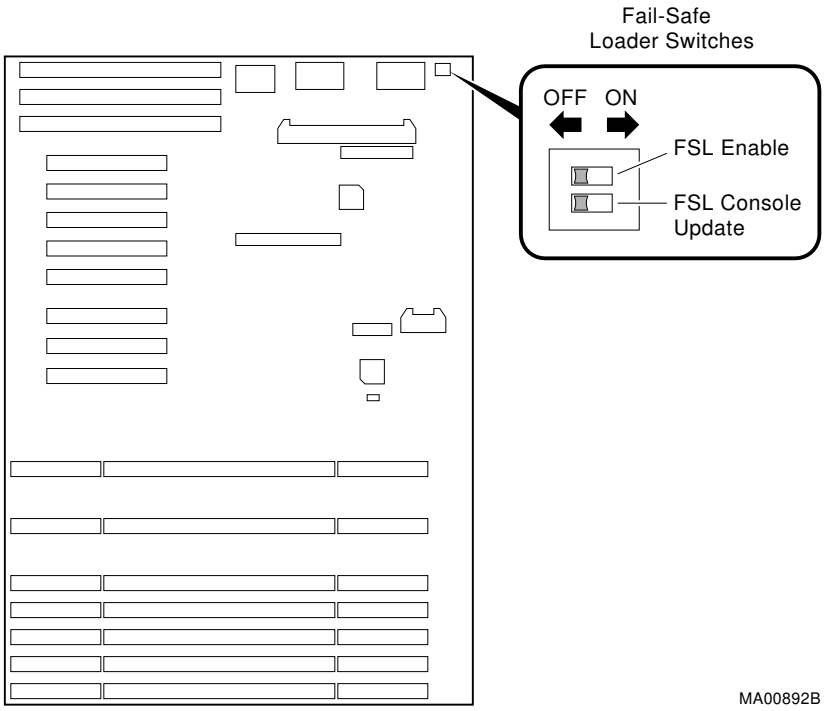

FSL Enable	Selects FSL console firmware when set to ON.
FSL Console Update	Allows writes to the fail-safe loader when set to ON. Used to update the fail-safe loader console firmware. When updating the FSL console, the FSL enable switch should be set of OFF.

Figure 2–3 Fail-Safe Loader Switches (BA744-A9 Rackmount Enclosure)

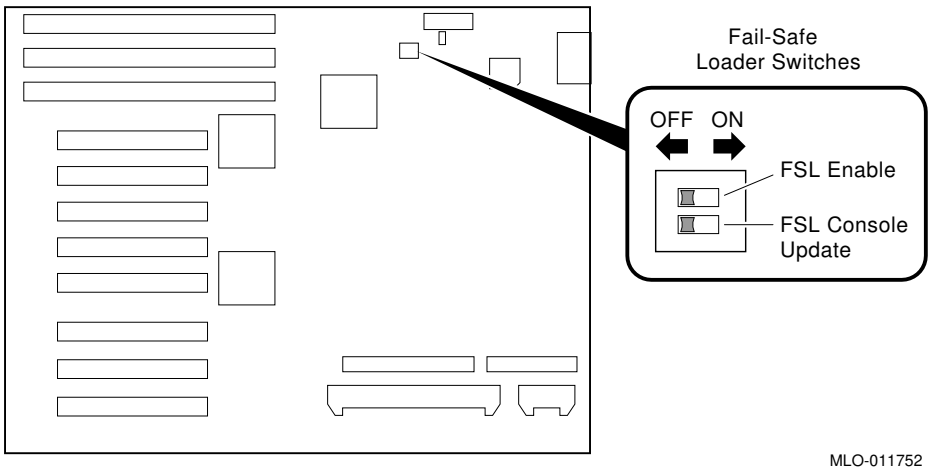

FSL Enable	Selects FSL console firmware when set to ON.
FSL Console Update	Allows writes to the fail-safe loader when set to ON. Used to update the fail-safe loader console firmware. When updating the FSL console, the FSL enable switch should be set of OFF.

2.7 Interpreting System LEDs

This section describes the function of system LEDs and what action to take when a failure is indicated. The system LEDs are used primarily to troubleshoot power problems and problems with boot devices. There are four types of system LEDs:

- Power LEDs
- Halt button LED at power-up
- Storage device LEDs
- I/O panel LEDs

2.7.1 Power Supply LEDs (BA740/BA744 Enclosures)

Power supply LEDs (Figures 2–4 and 2–5) indicate the status of the power supply.

Refer to Table 2–9 for information on interpreting the LEDs and determining what actions to take when a failure is indicated.

The following types of failures will cause the power supply to shut down the system:

- Fan failure (after 5 seconds)
- Overtemperature condition
- Blown power supply fuse

Note

The internal power supply fuse is not a serviceable part. Return to factory for service.

Figure 2–4 Power Supply LEDs (BA740-B9 Pedestal Enclosure)

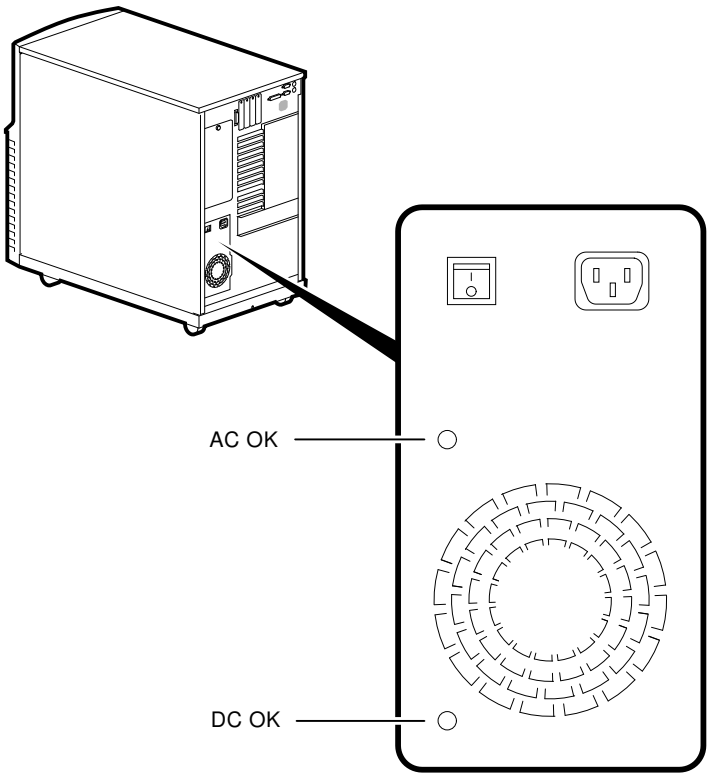

Figure 2–5 Power Supply LED–DC OK (BA744-A9 Rackmount Enclosure)

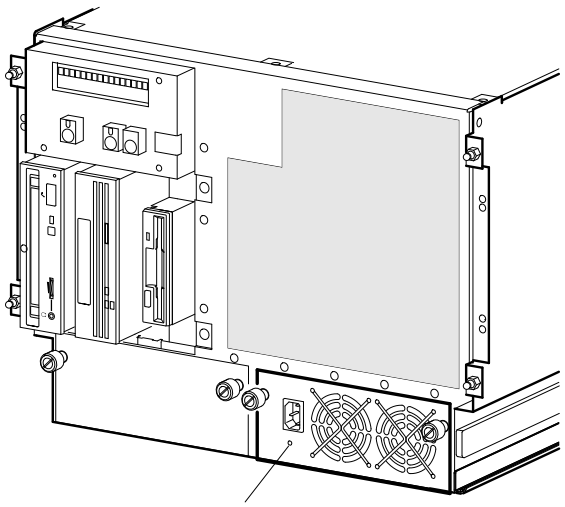

Note

The rackmount power supply LED, which indicates that DC voltages are within specified tolerances, does not check the -12V signal. Communications devices and other options that use -12V may fail due to a bad power supply.

Table 2–9 Interpreting Power Supply LEDs

Indicator	Meaning	Action on Error
AC OK	When lit, indicates AC power is present and the AC On/Off switch is set to ''on.''	If AC power is not present, check the power source and power cord. If the system will not power up, check the DC On/Off button setting on the operator control panel. Make sure the air intake is unobstructed and that the room temperature is within environmental specifications (10–35°C, 50–95°F) and reset the AC On/Off switch. For rackmount systems, AC power is indicated by spinning fans. If the power supply shuts down after approximately 5 seconds, use a flashlight to look through the front of the system (to the left of the internal StorageWorks shelf) to determine if the 6.75-inch fan is spinning at power-up. A failure of the 6.75-inch fan will cause the system to shut down after approximately 5 seconds.
DC OK	When lit, indicates that all the DC output voltages are within specified tolerances.	If DC power is not present when both the AC power switch and DC On/Off button are set to on, the power supply needs to be replaced. For rackmount systems, the power supply LED indicates that DC output voltages are within specified tolerances. Note that the -12V voltage is not tested by the LED.

2.7.2 Halt Button LED (At Power-Up)

During power-up, the console firmware checks for errors logged through the serial control bus. If an error is detected, the Halt button LED on the operator control panel lights.

If the Halt button LED comes on during power-up, use the `show fru` and `show error` commands (Chapter 3) to see what errors have been logged and to examine error information contained in serial control bus EEPROMs.

Figure 2–6 shows the location of the Halt button LED.

Figure 2–6 Halt Button

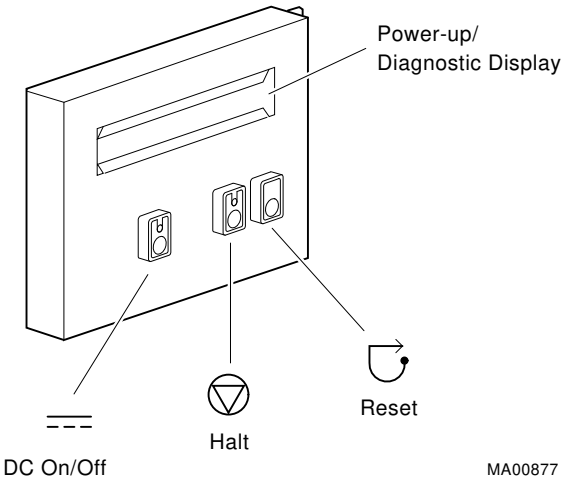

2.7.3 Storage Device LEDs

Storage device LEDs indicate the status of the device.

- Figure 2–7 shows the LEDs for disk drives contained in a StorageWorks shelf. A failure is indicated by the Fault light on each drive.
- Figure 2–8 shows the Activity LED for the floppy drive. This LED is on when the drive is in use.
- Figure 2–9 shows the Activity LED for the CD–ROM drive. This LED is on when the drive is in use.

For information on other storage devices, refer to the documentation provided by the manufacturer or vendor.

Figure 2–7 StorageWorks Disk Drive LEDs (SCSI)

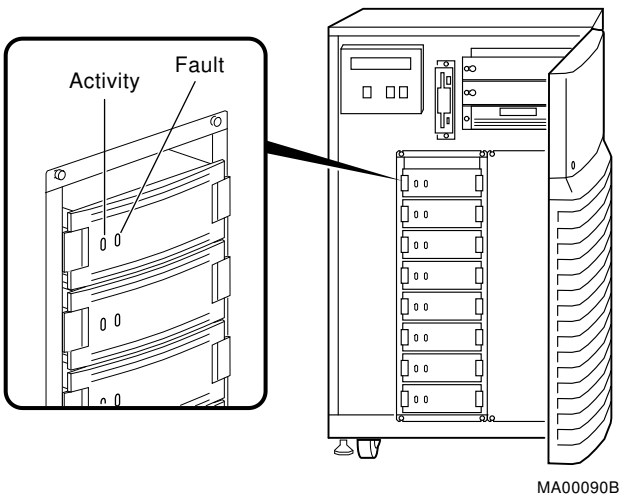

Figure 2–8 Floppy Drive Activity LED

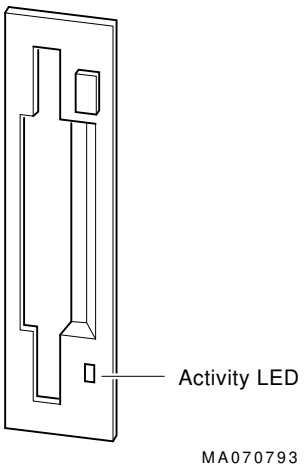

Figure 2–9 CD–ROM Drive Activity LED

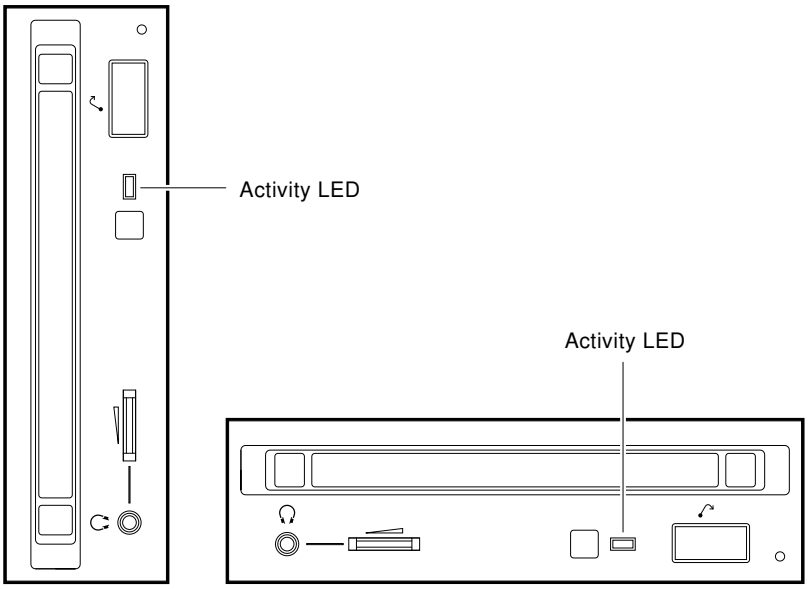

2.8 Power-Up Sequence

During the AlphaServer 2100A power-up sequence, the power supplies are stabilized and the system is initialized and tested via the firmware power-on self-tests.

The power-up sequence includes the following:

- Power supply power-up:
  - AC power-up
  - DC power-up
- Two sets of power-on diagnostics:
  - Serial ROM diagnostics
  - Console firmware-based diagnostics

Caution

The pedestal enclosure will not power up if the left side panel is not securely attached. Removing the side panel will cause the system to shut down.

2.8.1 AC Power-Up Sequence

The following power-up sequence occurs when AC power is applied to the system (system is plugged in) or, for pedestal enclosures, when the AC On/Off switch is set to ‘‘on;’’ or when electricity is restored after a power outage:

1. The front end of the power supply begins operation and energizes.
2. The power supply then waits for the DC power to be enabled.

For pedestal enclosures, the AC OK LED is illuminated when AC power is applied.

Note

For rackmount systems, you should hear the fans spin up when the system is plugged in (AC power applied).

For pedestal systems, the left side panel must be securely installed. A safety interlock prevents the system from being powered on with the panel or cover removed.

2.8.2 DC Power-Up Sequence

DC power is applied to the system with the DC On/Off button on the operator control panel.

A summary of the DC power-up sequence is provided below:

1. When the DC On/Off button is pressed, the power supply checks for a POK_H condition.
2. 12V, 5V, 3.3V, and -12V outputs are energized and stabilized. If the outputs do not come into regulation, the power-up is aborted and the power supply enters the latching-shutdown mode.
3. With a POK_H condition established and DC voltages stabilized, the power supply delivers a DCOK_H signal to the backplane.

4. The backplane then generates the ASYNC_RESET_L. In the case of a full power supply configuration, each DCOK_H signal must be asserted; in the case of a redundant power supply configuration, either one of DCOK_H signals must be asserted.

   Redundant: POK_H = PS1_POK_H or PS2_POK_H
   DCOK_H = PS1_DCOK_H or PS2_DCOK_H

   Full: POK_H = PS1_POK_H and PS2_POK_H
   DCOK_H = PS1_DCOK_H and PS2_DCOK_H

   For pedestal systems, the redundant power jumper (W1) on the system backplane (Figure 2–10) controls the mode of power supply operation.

   For rackmount systems, the redundant power jumper (W1) on the PCI/ESA backplane (Figure 2–11) controls the mode of power supply operation.

5. For systems with power supply LEDs, the DC OK LED on the power supply is lit. Firmware power-up diagnostics begin.

Figure 2–10 Power Supply Mode Jumper (W1) on the System Backplane (BA740-B9 Pedestal Enclosure)

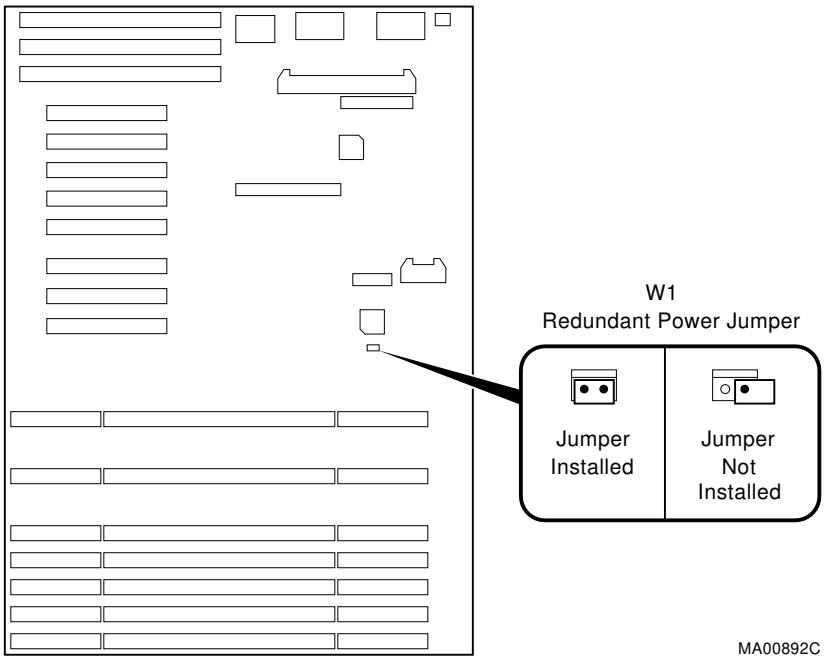

Redundant power (W1)	When installed, dual power supplies operate in redundant mode.

Figure 2–11 Power Supply Mode Jumper (W1) on the PCI/EISA Backplane (BA744-A9 Rackmount Enclosure)

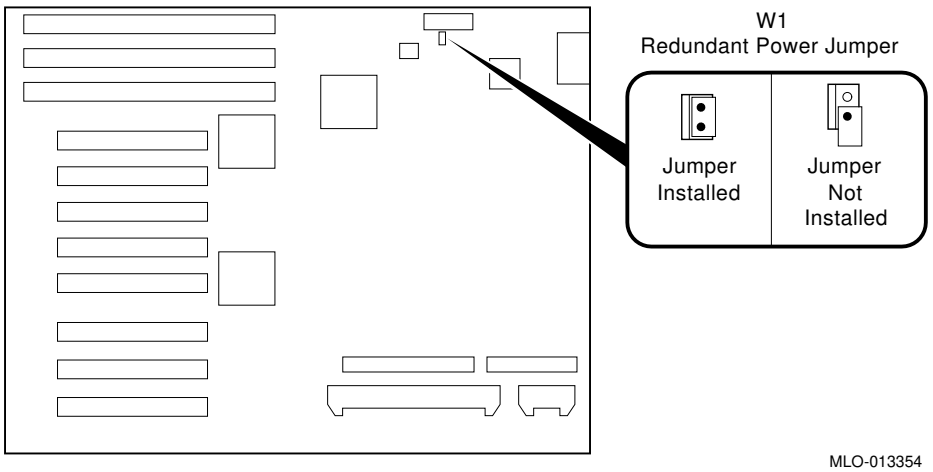

Redundant power (W1)	When installed, dual power supplies operate in redundant mode.

2.9 Firmware Power-Up Diagnostics

After successful completion of AC and DC power-up sequences, the processor performs its power-up diagnostics. These tests verify system operation, load the system console, and test the core system (CPU, memory, and system backplane), including all boot path devices. These tests are performed as two distinct sets of diagnostics:

1. Serial ROM diagnostics—These tests are loaded from the serial ROM located on the CPU module into the CPU's instruction cache (I-cache). They check the basic functionality of the system and load the console code from the FEPROM on the system backplane (pedestal systems) or PCI/EISA backplane (rackmount systems) into system memory.

   Failures during these tests are indicated by the power-up/diagnostic display on the operator control panel. Diagnostic test and exerciser failures are also logged in EEPROM as TDD error logs via the serial control bus for CPU, memory, and system backplane.

2. Console firmware-based diagnostics—These tests are executed by the console code. They test the core system, including all boot path devices.

Failures during these tests are reported to the console terminal via the power-up screen or console event log. Diagnostic test and exerciser failures are also logged in EEPROM as TDD or SDD error logs via the serial control bus for CPU, memory, and system backplane.

2.9.1 Serial ROM Diagnostics

The serial ROM diagnostics are loaded into the CPU's instruction cache from the serial ROM on the CPU module. They test the system in the following order:

1. Test the CPU and backup cache located on the CPU module. If the backup cache fails testing, a CPU failure is indicated on the power-up/diagnostic display on the operator control panel (OCP), the error is logged to the serial control bus EEPROM, and remaining backup cache tests are completed.
2. Test the CPU module's system bus interface.
3. Test the system bus to PCI bus bridge and system bus to EISA bus bridge. If the PCI bridge or EISA bridge fails, an I/O failure is indicated on the power-up/diagnostic display on the OCP. The power-up tests continue despite these errors.
4. CPUs determine which CPU will serve as the primary CPU. Each CPU reads error log information from every CPU EEPROM. The lowest numbered passing CPU is selected as the primary CPU in a process called multiprocessor failover (Section 2.2.1). If all CPUs fail power-up diagnostics, then CPU0 is selected as the primary CPU. The primary CPU then takes control and completes the remaining steps.
5. Locate the largest memory module in the system and test the first 32 MB of memory on the module. Only the first 32 MB of memory are tested. If there is more than one memory module of the same size, the lowest numbered memory module (one closest to the CPU) is tested first.

   If the memory test fails, the next largest memory module in the system is tested. Testing continues until a good memory module is found. If a good memory module is not found, a memory failure is indicated on the power-up /diagnostic display on the OCP, and the power-up tests are terminated.
6. Check the access to the FEPROMs on the system backplane (pedestal systems) or PCI/EISA backplane (rackmount systems).
7. The SRM console program is loaded into memory from the FEPROM on the system backplane (pedestal systems) or PCI/EISA backplane (rackmount systems). A checksum test is executed for the console image. If the checksum test fails, the fail-safe loader (FSL) is automatically loaded into memory and the system displays the FSL prompt, `ash>`.

If the checksum test passes, control is passed to the console code, and the console firmware-based diagnostics are run.

While the console is being loaded into memory, CPUs with errors logged are disabled (if not the primary CPU). Working CPUs spin on mailbox (they continuously read the mailbox address).

2.9.2 Console Firmware-Based Diagnostics

Console firmware-based tests are executed once control is passed to the console code in memory. They check the system in the following order:

1. Perform a complete check of system memory. If a system has more than one memory module, the modules are checked in parallel.
2. Set memory interleave to maximize interleave factor across as many memory modules as possible (one, two, or four-way interleaving). During this time the console firmware is moved into backup cache on the primary CPU module. After memory interleave is set, the console firmware is moved back into memory.

   Steps 3–6 may be completed in parallel.
3. Start the I/O drivers for mass storage devices and tapes. At this time a complete functional check of the machine is made. After the I/O drivers are started, the console program continuously polls the bus for devices (approximately every 20 or 30 seconds).
4. Check that EISA configuration information is present in NVRAM for each EISA module detected and that no information is present for modules that have been removed.
5. Run exercisers on the drives currently seen by the system.

Note

This step does not ensure that all disks in the system will be tested or that any device drivers will be completely tested. Spin-up time varies for different drives, so not all disks may be on line at this point in the power-up. To ensure complete testing of disk devices, use the `test` command.

6. If the Halt button is set to ‘‘in’’ (depressed), the customized NVRAM script (if the customer has created one) is not executed.
7. Enter console mode or boot the operating system. This action is determined by the Halt button setting or auto_action environment variable.

If the os_type environment variable is set to NT, the ARC console is loaded into memory, and control is passed to the ARC console.

3
Running System Diagnostics

This chapter provides information on how to run system diagnostics.

- Section 3.1 describes how to run ROM-based diagnostics, including error reporting utilities and loopback tests.
- Section 3.4 describes acceptance testing and initialization procedures.
- Section 3.5 describes the DEC VET operating system exerciser.

3.1 Running ROM-Based Diagnostics

ROM-based diagnostics (RBDs), which are part of the console firmware that is loaded from the FEPROM on the system backplane, offer many powerful diagnostic utilities, including the ability to examine error logs from the console environment and run system- or device-specific exercisers.

AlphaServer 2100A RBDs rely on exerciser modules, rather than functional tests, to isolate errors. The exercisers are designed to run concurrently, providing a maximum bus interaction between the console drivers and the target devices.

The multitasking ability of the console firmware allows you to run diagnostics in the background (using the background operator ''&'' at the end of the command). You run RBDs by using console commands.

Note

ROM-based diagnostics, including the `test` command, are run from the SRM console (firmware used by OpenVMS and Digital UNIX). If you are running Windows NT, refer to Section 5.1.2 for the steps used to switch between consoles.

RBD console commands do not log errors to the serial control bus EEPROMs. Errors are reported to the console terminal and/or the console event log.

3.2 Command Summary

Table 3–1 provides a summary of the diagnostic and related commands.

Table 3–1 Summary of Diagnostic and Related Commands

Command	Function	Reference
Acceptance Testing		
test	Quickly tests the core system. The `test` command is the primary diagnostic for acceptance testing and console environment diagnosis.	Section 3.3.1
Error Reporting		
clear_error	Clears error information logged through the serial control bus. The `show error` command displays errors logged to the serial control bus EEROMs.	Section 3.3.5
show error	Reports core system errors captured by test-directed diagnostics (TDD), via the RBDs, and symptom-directed diagnostics (SDD), via the operating system.	Section 3.3.4
show fru	Reports system bus module identification numbers and summary error information.	Section 3.3.3
Extended Testing/Troubleshooting		
exer_read	Tests a disk by performing random reads on the specified device.	Section 3.3.6
memexer	Exercises memory by running a specified number of memory tests. The tests are run in the background.	Section 3.3.7
memexer_mp	Tests memory in a multiprocessor system by running a specified number of memory exerciser sets. The tests are run in the background.	Section 3.3.8
net -ic	Initializes the MOP counters for the specified Ethernet port.	Section 3.3.11
net -s	Displays the MOP counters for the specified Ethernet port.	Section 3.3.10
nettest	Runs external loopback tests for specified EISA- or PCI-based Ethernet ports.	Section 3.3.9
sys_exer	Exercises core system. Runs tests concurrently.	Section 3.3.2

(continued on next page)

Table 3–1 (Cont.) Summary of Diagnostic and Related Commands

Command	Function	Reference
Loopback Testing		
test lb	Conducts loopback tests for COM2 and the parallel port in addition to quick core system tests.	Section 3.3.1
sys_exer lb	Conducts loopback tests for COM2 and the parallel port in addition to core system tests.	Section 3.3.2
nettest	Runs external or internal loopback tests for specified EISA- or PCI-based Ethernet ports.	Section 3.3.9
Diagnostic-Related Commands		
kill	Terminates a specified process.	Section 3.3.12
kill_diags	Terminates all currently executing diagnostics.	Section 3.3.12
show_status	Reports the status of currently executing test /exercisers.	Section 3.3.13

3.3 Command Reference

This section provides detailed information on the diagnostics commands and related commands.

3.3.1 test

The `test` command runs firmware diagnostics for the entire core system. The tests are run sequentially and the status of each subsystem test is displayed to the console terminal as the tests progress. If a particular device is not available to test, a message is displayed.

Note

By default, no write tests are performed on disk and tape drives. Media must be installed to test the floppy drive and tape drives.

When using the `test` command after shutting down an operating system, you must initialize the system to a quiescent state. Enter the following commands at the SRM console:

```
P00>>> set auto_action halt
P00>>> init
...
P00>>>  test
```

After testing is completed, set the auto_action environment variable to its previous value (usually, boot) and use the Reset button to reset the system.

The `test` script tests devices in the following order:

1. Memory tests (one pass)

Note

Certain memory errors that are reported by the OCP may not be reported by the ROM-based diagnostics. Always check the power-up/diagnostic display before running diagnostic commands.

2. Read-only tests: DK* disks, DR* disks, DU* disks, MK* tapes, DV* floppy
3. Console loopback tests if lb argument is specified: COM2 serial port and parallel port
4. VGA console tests—These tests are run only if the console environment variable is set to ‘‘serial.’’ The VGA console test displays rows of ‘‘Digital’’.
5. Network external loopback tests for EWA0—This test requires that the Ethernet port be terminated or connected to a live network; otherwise, the test will fail.

Synopsis:

test [lb]

Arguments:

[lb]	The loopback option includes console loopback tests for the COM2 serial port and the parallel port during the test sequence.

Examples:

The system is tested, and the tests complete successfully.

```
P00>>> test
 Testing the Memory
Testing the DK* Disks(read only)
dkb600.6.0.2.1 has no media present or is disabled via the RUN/STOP switch
file open failed for dkb600.6.0.2.1
No DR* Disks available for testing
Testing the MK* Tapes(read only)
Testing the DV* Floppy Disks(read only)
file open failed for dva0.0.0.0.1
Testing the VGA(Alphanumeric Mode only)
Testing the EW* Network
P00>>>
```

The system is tested, and the system reports an error message. No network server responded to a loopback message. Ethernet connectivity on this system should be checked.

```
P00>>> test
Testing the Memory
Testing the DK* Disks(read only)
No DR* Disks available for testing
Testing the MK* Tapes(read only)
Testing the DV* Floppy Disks(read only)
Testing the VGA(Alphanumeric Mode only)
Testing the EW* Network

*** Error (ewa0), Mop loop message timed out from: 08-00-2b-3b-42-fd

*** List index: 7 received count: 0 expected count 2

P00>>>
```

3.3.2 sys_exer

The `sys_exer` command runs firmware diagnostics for the entire core system. The same tests that are run using the `test` command are run with `sys_exer`, only these tests are run concurrently and in the background. Nothing is displayed unless an error occurs.

Note

Some processes started using `sys_exer` are not stopped using the `kill` and `kill_diags` commands. Use the `init` command to terminate all sys_exer processes.

Because the sys_exer tests are run concurrently and indefinitely (until you stop them with the `init` command), they are useful in flushing out intermittent hardware problems.

Note

By default, no write tests are performed on disk and tape drives. Media must be installed to test the floppy drive and tape drives.

Certain memory errors that are reported by the OCP may not be reported by the ROM-based diagnostics. Always check the power-up/diagnostic display before running diagnostic commands.

Synopsis:

sys_exer [lb]

Arguments:

[lb]	The loopback option includes console loopback tests for the COM2 serial port and the parallel port during the test sequence.

Examples:

```
P00>>> sys_exer

Exercising the Memory
Exercising the DK* Disks(read only)
Exercising the MK* Tapes(read only)
Exercising the Floppy(read only)
Exercising the VGA(Alphanumeric Mode only)
Exercising the EWA0 network

Type init in order to boot the operating system

P00>>> show_status

 ID       Program      Device       Pass  Hard/Soft Bytes Written  Bytes Read
-------- ------------ ------------ ------ --------- ------------- -------------
00000001         idle system            0    0    0             0             0
0000006f      memtest memory            1    0    0      35651584      35651584
00000070      memtest memory            1    0    0      35651584      35651584
00000077      memtest memory            1    0    0      37748736      37748736
0000007e     exer_kid dka0.0.0.1.0      0    0    0             0         69120
0000007f     exer_kid dka600.6.0.1      0    0    0             0         66560
00000093     exer_kid dva0.0.0.0.1      0    0    0             0             0
000000d5      nettest ewa0.0.0.0.0     13    0    0        308672        308672
P00>>> init
```

3.3.3 show fru

The `show fru` command reports FRU and error information for the following FRUs based on the serial control bus EEPROM data:

- CPU modules
- Memory modules
- I/O modules

For each of the above FRUs, the slot position, option, part, revision, and serial numbers, as well as any reported symptom-directed diagnostics (SDD) and test-directed diagnostics (TDD) event logs are displayed.

In addition, installed PCI and EISA modules are displayed with their respective slot numbers.

Synopsis:

show fru ([target [target . . .]])

Arguments:

[target] CPU{0,1,2,3}, mem{0,1,2,3}, io.

Example for AlphaServer 2100A Systems:

```
P00>>> show fru
  ❶    ❷      ❸                ❹        ❺              ❻
                                 Rev                    Events logged
 Slot   Option  Part#           Hw Sw   Serial#         SDD     TDD
   0    IO      B2222-AA        B2 0    NI53400096      00      00
   2    CPU0    B2020-AA        B2 10   KA426C0457      00      00
   4    MEM0    B2021-BA        A1 0    ML34156292      00      00

 Slot   Option                  Hose 0, Bus 2, PCI on Primary I/O

 Slot   Option                  Hose 0, Bus 0, PCI on Primary I/O
   6    DECchip 21050-AA                            PCI Option Slot 4
   9    Compaq 1280/P                             PCI Option Slot 7

 Slot   Option                  Hose 0, Bus 1, EISA on Primary I/O
   1    DEC4220

P00>>>
```

❶ System bus physical slot number for FRU (slots 0–7 top to bottom)

Slot 0: System backplane
Slot 1–3, 5: CPU modules
Slot 4–7: Memory modules

❷ Option name (I/O, CPU#, or MEM#)

❸ Option part number

❹ Revision numbers (hardware and firmware)

❺ Option serial number

❻ Events logged:

Numbers other than ‘‘00’’ indicate that errors have been logged.

SDD: Number of symptom-directed diagnostic events logged by the serial ROM diagnostics at power up.
TDD: Number of test-directed diagnostic events logged by the firmware diagnostics at power up.

3.3.4 show error

The `show error` command reports error information based on the serial control bus EEPROM data. Both the operating system and the ROM-based diagnostics log errors to the serial control bus EEPROMs. This functionality provides the ability to generate an error log from the console environment.

A closely related command, `show fru` (Section 3.3.3), reports FRU and error information for FRUs.

Synopsis:

show error ([target [target . . .]])

Arguments:

[target] CPU{0,1,2,3}, mem{0,1,2,3}, and io.

Memory Errors

Note

Certain memory errors that are reported by the OCP may not be reported by the ROM-based diagnostics. Always check the power-up/diagnostic display before running diagnostic commands.

Correctable errors are indicated by event type 00. If five or more correctable errors are logged for the same memory module, the specified module should be replaced.

For all unncorrectable errors, indicated by event types 01 and 10, you should replace the failing memory module.

Memory Error Example:

```
P00>>> show error mem3
Test Directed Errors

No Entries Found

Symptom Directed Errors
 ❶        ❷              ❸            ❹         ❺       ❻        ❼
Entry   Fail Address   Bits/Syndrome   Bank #   ASIC #   Source   Event Type
  0     0be21e00          0cd2           1        1        1          00
  1     0be26b80          0cd2           1        1        1          00
  2     04224020          14,09          2        1        1          01
P00>>>
```

❶ Event log entry number

❷ Fail address—The zero-based module failing address. If the module is configured at base address zero, then the failing address is the offset to the failing DRAM.

❸ Bits/syndrome—First two failing bits (in hexadecimal) for uncorrectable errors; syndrome (in hexadecimal) for correctable errors.

❹ Bank number—The bank number of the failing DRAM.

❺ Asic number—The asic chip that detected the error.

❻ Source—The software or firmware that logged the error.

0—SROM
1—SRM firmware (RBDs)
2—UNIX
3—VMS
4—NT
5–7—Reserved

❼ Event type:

00—Data correctable
01—Data uncorrectable
10—Data uncorrectable (first two bits logged)
11—Other (address and syndrome fields not valid)

CPU Errors

Note

Different CPU types cannot be used within the same system. Example: A KN470 CPU module and a KN480 CPU module cannot be used in the same system.

If an event is logged for any other test than test number 00, the CPU should be replaced. Event logs with just test number 00 do not indicate a bad CPU. Test number 00 indicates that a CPU failover occurred sometime in the past.

All systems must have a CPU module installed in system bus slot 2 (CPU0).

CPU Error Example:

```
P00>>> show error cpu0

CPU0 Module EEROM Event Log

Test Directed Errors
                          ❶
Entry: 0  Test Number: 02       Subtest Number: 02
Parameter 1: 00000000,00000010
Parameter 2: ffffffff,ffffffff
Parameter 3: fffffeff,ffffffff

CPU Event Counters
C3_CA_NOACK     0
   .
   .
   .
C3_DT_PAR_E     0
C3_DT_PAR_O     0

B-Cache Correctable Errors

Entry   Syndrome        Offset L        Offset H        Count

No Entries Found
P00>>>
```

❶ Test Number—A test number other than 00 indicates the CPU should be replaced. Test number 00 indicates a CPU failover has occurred.

3.3.5 clear_error

The `clear_error` command clears error information logged to the serial control bus EEPROMs. The `show fru` command can be used to verify that errors have been cleared (the events logged columns will be set to zeros).

Synopsis:

clear_error ([all, cpu0–3, mem0–3, io])

Arguments:

[target] all, CPU{0,1,2,3}, mem{0,1,2,3}, and io.

Examples:

```
P00>>> clear_error all
P00>>>
```

3.3.6 exer_read

The `exer_read` command tests a disk by performing random reads of 2048 bytes on one or more devices. The exercisers are run in the background and nothing is displayed unless an error occurs.

The tests continue until one of the following conditions occurs:

1. All blocks on the device have been read for a passcount of d_passes (default is 1).
2. The exer_read process has been terminated via the `kill` or `kill_diags` commands, or Ctrl/C.
3. The specified time has elapsed.

To terminate the read tests, enter Ctrl/C, or use the `kill` command to terminate an individual diagnostic or the `kill_diags` command to terminate all diagnostics. Use the `show_status` display to determine the process ID when terminating an individual diagnostic test.

Synopsis:

exer_read [-sec seconds] [device_name device_name . . .]

Arguments:

[device_name] One or more device names to be tested. The default is du*.*, dk*.*, and dr*.* to test all DSSI and SCSI disks and floppy drives that are on line. These drives may be on the native SCSI bus or connected to an EISA- or PCI-based controller.

Options:

[-sec seconds] Number of seconds to run exercisers. If you do not enter the number of seconds, the tests will run until d_passes have completed (d_passes default is 1).

If you want to test the entire disk, run at least one pass across the disk. If you do not need to test the entire disk, run the test for 5 or 10 minutes.

Examples:

```
P00>>> exer_read

failed to send command to pkc0.1.0.2.0
failed to send Read to dkc100.1.0.2.0


*** Hard Error - Error #5 -

Diagnostic Name        ID             Device  Pass  Test  Hard/Soft
31-JUL-1995 14:54:18

exer_kid         00000175       dkc100.1.0.2     0     0     1    0
Error in read of 0 bytes at location 014DD400 from device dkc100.1.0.2.0

*** End of Error ***
P00>>>
```

3.3.7 memexer

The `memexer` command tests memory by running a specified number of memory exercisers. The exercisers are run in the background and nothing is displayed unless an error occurs. Each exerciser tests all available memory in twice the backup cache size blocks for each pass.

Note

Certain memory errors that are reported by the OCP may not be reported by the ROM-based diagnostics. Always check the power-up/diagnostic display before running diagnostic commands.

To terminate the memory tests, use the `kill` command to terminate an individual diagnostic or the `kill_diags` command to terminate all diagnostics. Use the `show_status` display to determine the process ID when terminating an individual diagnostic test.

Synopsis:

memexer [number]

Arguments:

[number]	Number of memory exercisers to start. The default is 1. The number of exercisers, as well as the length of time for testing, depends on the context of the testing. Generally, running three to five exercisers for 15 minutes to 1 hour is sufficient for troubleshooting most memory problems.

Examples:

Example with no errors.

```
P00>>> memexer 4
P00>>> show_status

      ID      Program       Device   Pass Hard/Soft Bytes Written    Bytes Read
-------- ------------ ------------ ------ --------- ------------- -------------
00000001         idle       system      0    0    0             0             0
000000c7      memtest       memory      3    0    0     635651584      62565154
000000cc      memtest       memory      2    0    0     635651584      62565154
000000d0      memtest       memory      2    0    0     635651584      62565154
000000d1      memtest       memory      3    0    0     635651584      62565154
P00>>> kill_diags
P00>>>
```

Example with a memory compare error indicating a bad module.

```
P00>>> memexer 4

*** Hard Error - Error #44 - Memory compare error

Diagnostic Name        ID             Device  Pass  Test  Hard/Soft   1-JAN-1996
memtest          000000c8               brd0     1     1     1    0     12:00:01
Expected value:  00000004
Received value:  80000001
Failing addr:    800001c

*** End of Error ***

P00>>> kill_diags
P00>>>
```

3.3.8 memexer_mp

The `memexer_mp` command tests memory cache coherency in a multiprocessor system by running a specified number of memory exerciser sets. A set is a memory test that runs on each processor checking alternate longwords. The exercisers are run in the background and nothing is displayed unless an error occurs.

Note

Certain memory errors that are reported by the OCP may not be reported by the ROM-based diagnostics. Always check the power-up/diagnostic display before running diagnostic commands.

To terminate the memory tests, use the `kill` command to terminate an individual diagnostic or the `kill_diags` command to terminate all diagnostics. Use the `show_status` display to determine the process ID when terminating an individual diagnostic test.

Synopsis:

memexer_mp [number]

Arguments:

[number]	Number of memory exerciser sets to start. The default is 1. The number of exercisers, as well as the length of time for testing, depends on the context of the testing. Generally, running two or three exercisers for 5 minutes is sufficient.

Examples:

```
P00>>> memexer_mp 2
P00>>> show_status
 ID       Program      Device       Pass  Hard/Soft Bytes Written  Bytes Read
-------- ------------ ------------ ------ --------- ------------- -------------
00000001         idle system            0    0    0             0             0
00000197      memtest memory           50    0    0      51380224      51380224
000001a1      memtest memory           49    0    0      50331648      50331648
000001c2      memtest memory           23    0    0      23068672      23068672
000001cc      memtest memory           19    0    0      18874368      18874368

P00>>> kill_diags
P00>>>
```

3.3.9 nettest

The `nettest` command can be used to run loopback tests for any EISA- or PCI-based Ethernet ports. It can also be used to test a port on a ‘‘live’’ network.

If the loopback tests are set to run continuously (-p pass_count set to 0), use the `kill` command (or Ctrl/C) to terminate an individual diagnostic or the `kill_diags` command to terminate all diagnostics. Use the `show_status` display to determine the process ID when terminating an individual diagnostic test.

Synopsis:

nettest [-mode port_mode] [-p pass_count] [port]

Arguments:

[port]	Specifies the Ethernet port on which to run the test; for example, ewa0 for the DECchip 21040-AA (TULIP) controller.

Note

The LANCE chip controller, era0, is not a supported boot device for AlphaServer 2100A systems.

Options:

[-p pass_count]	Specifies the number of times to run the test. If 0, then run continuously. The default value is 1. This is the number of passes for the diagnostic. Each pass sends the number of loop messages as set by the environment variable, `ewa*_loop_count`.
[-mode port_ mode]	Specifies the mode to set the port adapter. • ex — external loopback, the default setting (requires a loopback connector or connection to a live network) • in — internal loopback (loopbacks are conducted within the chip only) Note: Not all network controllers support internal loopback protocol. • nc — no change, leaves the mode as currently set.

Testing an Ethernet Port:

```
P00>>> nettest ewa0 -p 0 &
P00>>> show_status

 ID       Program      Device       Pass  Hard/Soft Bytes Written  Bytes Read
-------- ------------ ------------ ------ --------- ------------- -------------
00000001         idle system            0    0    0             0             0
000000d5      nettest ewa0.0.0.0.0     13    0    0        308672        308672
P00>>> kill_diags
P00>>>
```

Testing an Ethernet Port on a Live Network:

1. Create a list of nodes for which to send MOP loopback packets from port ewa0. The following command places node addresses (from the network database) into the file, lp_nodes_ewa0, in a format that the driver can read.

   ```
   P00>>>echo : 08-00-2B-E2-56-2A > ndbr/lp_nodes_ewa0
   ```

2. View the list of nodes.

   ```
   P00>>>cat ndbr/lp_nodes_ewa0
   Node: 08-00-2b-e2-56-2a
   ```

3. Start the testing using the -mode nc flag to leave the port in the default state.

   ```
   P00>>>nettest ewa0 -mode nc -p 0 &
   ```

4. View the status of the test.

   ```
   P00>>>show_status

    ID       Program      Device       Pass  Hard/Soft Bytes Written  Bytes Read
   -------- ------------ ------------ ------ --------- ------------- -------------
   00000001         idle system            0    0    0             0             0
   000000b5      nettest ewa0.0.0.4.1      7    0    0        322068        322000
   ```

5. Stop the testing.

   ```
   P00>>>kill_diags
   P00>>>
   ```

3.3.10 net -s

The `net -s` command displays the MOP counters for the specified Ethernet port.

Synopsis:

net -s ewa0

Examples:

```
P00>>> net -s ewa0

Status counts:
ti: 72 tps: 0 tu: 47 tjt: 0 unf: 0 ri: 70 ru: 0
rps: 0 rwt: 0 at: 0 fd: 0 lnf: 0 se: 0 tbf: 0
tto: 1 lkf: 1 ato: 1 nc: 71 oc: 0

MOP BLOCK:
 Network list size: 0

MOP COUNTERS:
Time since zeroed (Secs): 42

TX:
 Bytes: 0 Frames: 0
 Deferred: 1 One collision: 0 Multi collisions: 0
TX Failures:
 Excessive collisions: 0 Carrier check: 0 Short circuit: 71
 Open circuit: 0 Long frame: 0 Remote defer: 0
 Collision detect: 71

RX:
 Bytes: 49972 Frames: 70
 Multicast bytes: 0 Multicast frames: 0
RX Failures:
 Block check: 0 Framing error: 0 Long frame: 0
 Unknown destination: 0 Data overrun: 0 No system buffer: 0
 No user buffers: 0
P00>>>
```

3.3.11 net -ic

The `net -ic` command initializes the MOP counters for the specified Ethernet port.

Synopsis:

net -ic ewa0

Examples:

```
P00>>> net -ic ewa0
P00>>> net -s ewa0
Status counts:
ti: 72 tps: 0 tu: 47 tjt: 0 unf: 0 ri: 70 ru: 0
rps: 0 rwt: 0 at: 0 fd: 0 lnf: 0 se: 0 tbf: 0
tto: 1 lkf: 1 ato: 1 nc: 71 oc: 0

MOP BLOCK:
 Network list size: 0

MOP COUNTERS:
Time since zeroed (Secs): 3

TX:
 Bytes: 0 Frames: 0
 Deferred: 0 One collision: 0 Multi collisions: 0
TX Failures:
 Excessive collisions: 0 Carrier check: 0 Short circuit: 0
 Open circuit: 0 Long frame: 0 Remote defer: 0
 Collision detect: 0

RX:
 Bytes: 0 Frames: 0
 Multicast bytes: 0 Multicast frames: 0
RX Failures:
 Block check: 0 Framing error: 0 Long frame: 0
 Unknown destination: 0 Data overrun: 0 No system buffer: 0
 No user buffers: 0
P00>>>
```

3.3.12 kill and kill_diags

The `kill` and `kill_diags` commands terminate diagnostics that are currently executing .

- The `kill` command terminates a specified process.
- The `kill_diags` command terminates all diagnostics.

Synopsis:

kill_diags

kill [PID . . .]

Arguments:

[PID . . .]	The process ID of the diagnostic to terminate. Use the `show_status` command to determine the process ID.

3.3.13 show_status

The `show_status` command reports one line of information per executing diagnostic. The information includes ID, diagnostic program, device under test, passes completed, error counts, bytes written and read.

Many of the diagnostics run in the background and provide information only if an error occurs. Use the `show_status` command to display the progress of diagnostics.

The following command string is useful for periodically displaying diagnostic status information for diagnostics running in the background:

P00>>> while true;show_status;sleep *n*;done

Where *n* is the number of seconds between `show_status` displays.

Synopsis:

show_status

Examples:

```
P00>>> show_status
```

❶ ID	❷ Program	❸ Device	❹ Pass	❺ Hard	❺ Soft	❻ Bytes Written	❼ Bytes Read
00000001	idle	system	0	0	0	0	0
0000006f	memtest	memory	1	0	0	35651584	35651584
00000070	memtest	memory	1	0	0	35651584	35651584
00000077	memtest	memory	1	0	0	37748736	37748736
0000007e	exer_kid	dka0.0.0.1.0	0	0	0	0	69120
0000007f	exer_kid	dka600.6.0.1	0	0	0	0	66560
00000093	exer_kid	dva0.0.0.0.1	0	0	0	0	0
000000d5	nettest	ewa0.0.0.0.0	13	0	0	308672	308672

```
P00>>>
```

❶ Process ID

❷ Program module name

❸ Device under test

❹ Diagnostic pass count

❺ Error count (hard and soft): Soft errors are not usually fatal; hard errors halt the system or prevent completion of the diagnostics.

❻ Bytes successfully written by diagnostic

❼ Bytes successfully read by diagnostic

3.4 Acceptance Testing and Initialization

Perform the acceptance testing procedure listed below after installing a system or whenever adding or replacing the following:

CPU modules
Memory modules
System backplane
PCI/EISA backplane (rackmount systems)
Storage devices
PCI or EISA options

1. Run the RBD acceptance tests using the `test` command.
2. If you have added or moved an EISA or some ISA options, run the EISA Configuration Utility (ECU).
3. Bring up the operating system.
4. Run DEC VET to test that the operating system is correctly installed. Refer to Section 3.5 for information on DEC VET.

3.5 DEC VET

Digital's DEC Verifier and Exerciser Tool (DEC VET) software is a multipurpose system maintenance tool that performs exerciser-oriented maintenance testing. DEC VET runs on OpenVMS, Digital UNIX, and Windows NT operating systems. DEC VET consists of a manager and exercisers. The DEC VET manager controls the exercisers. The exercisers test system hardware and the operating system.

DEC VET supports various exerciser configurations, ranging from a single device exerciser to full system loading—that is, simultaneous exercising of multiple devices.

Refer to the *DEC Verifier and Exerciser Tool User's Guide* (AA–PTTMD–TE) for instructions on running DEC VET.

4
Error Log Analysis

This chapter provides information on how to interpret error logs reported by the operating system.

- Section 4.1 describes machine check/interrupts and how these errors are detected and reported.
- Section 4.2 describes the entry format used by the error formatters.

4.1 Fault Detection and Reporting

Table 4–1 provides a summary of the fault detection and correction components of AlphaServer 2100A systems.

Generally, PALcode handles exceptions as follows:

- The PALcode determines the cause of the exception.
- If possible, it corrects the problem and passes control to the operating system for reporting before returning the system to normal operation.
- If error/event logging is required, control is passed through the system control block (SCB) to the appropriate exception handler.

Table 4–1 AlphaServer Fault Detection and Correction

Component	Fault Detection/Correction Capability
KN4nn Processor Module	
DECchip 21064 (EV4), 21064A (EV45), and 21164 (EV5) microprocessors	Contains error detection and correction (EDC) logic for data cycles. There are check bits associated for all data entering and exiting the 21064 or 21064A microprocessor. A single-bit error on any of the four longwords (or quadwords for EV5 processors) being read can be corrected (per cycle).

(continued on next page)

Table 4–1 (Cont.) AlphaServer Fault Detection and Correction

Component	Fault Detection/Correction Capability
KN4nn Processor Module	
Backup cache (B-cache)	EDC check bits on the data store; and parity on the tag store and duplicate tag store and control store.
MS450/MS451 Memory Modules	
Memory module	EDC logic protects data by detecting and correcting up to 2 bits per DRAM chip per gate array. The four bits of data per DRAM are spread across two gate arrays (one for even longwords, the other for odd longwords).
System Backplane (Pedestal Systems) or PCI/EISA Backplane (Rackmount Systems)	
System backplane or PCI /EISA backplane	SCSI controller: SCSI data parity is generated. PCI to EISA bridge chip: PCI data parity is generated. PCI to PCI chip: PCI data parity is generated.
System Backplane (Pedestal Systems) or System Bus Backplane (Rackmount Systems)	
System backplane or system bus backplane	System bus to PCI bus bridge chip (T3) : Longword parity on address and data.

4.1.1 Machine Check/Interrupts

The exceptions that result from hardware system errors are called machine check/interrupts. They occur when a system error is detected during the processing of a data request. There are three types of machine check/interrupts related to system events:

1. Processor machine check
2. System machine check
3. Processor-corrected machine check

The causes of each of the machine check/interrupts are as follows. The system control block (SCB) vector through which PALcode transfers control to the operating system is shown in parentheses.

Processor Machine Check (SCB: 670)

Processor machine check errors are fatal system errors that result in a system crash.

- The DECchip 21064, 21064A, or 21164 microprocessor detected one or more of the following uncorrectable data errors:
  - Uncorrectable B-cache data error
  - Uncorrectable memory data error (CU_ERR asserted)
  - Uncorrectable data from other CPU's B-cache (CU_ERR asserted)
- A B-cache tag or tag control parity error occurred
- Hard error was asserted in response to:
  - A system bus read data parity error
  - System bus timeouts (NOACK error bit asserted)—The bus responder detected a write data parity or command address parity error and did not acknowledge the bus cycle.

System Machine Check (SCB: 660)

A system machine check is a system-detected error, external to the DECchip 21064 microprocessor and possibly not related to the activities of the CPU. It occurs when C_ERROR is asserted on the system bus.

Fatal errors:

- The system backplane or system bus backplane detected a system bus data parity error while serving as system bus commander:
  - System bus errors (NOACK error bit asserted)—The bus responder detected a write data parity or command address parity error and did not acknowledge the bus cycle
  - Uncorrectable data (CU_ERR asserted) from a responder on the system bus
  - PCI-reported address data or timeout errors
- Any system bus device detected a command/address parity error
- A bus responder detected a write data parity error
- Memory or system bus gate array detected an internal error (SYNC error)

Nonfatal errors:

- A memory module corrected data
- Correctable B-cache errors were detected while the B-cache was providing data to the system bus (errors from other CPU)
- Duplicate tag store parity errors occurred

Processor-Corrected Machine Check (SCB: 630)

Processor-corrected machine checks are caused by B-cache errors that are detected and corrected by the DECchip 21064, 21064A, or 21164 microprocessor. These are nonfatal errors that result in an error log entry.

4.1.2 System Bus Transaction Cycle

In order to interpret error logs for system bus errors, you need a basic understanding of the system bus transaction cycle and the function of the commander, responder, and bystanders.

For any particular bus transaction cycle there is one commander (either CPU or backplane) that initiates bus transactions and one responder (memory, CPU, or I/O) that accepts or supplies data in response to a command/address from the system bus commander. A bystander is a system bus node (CPU, I/O, or memory) that is not addressed by a current system bus commander.

There are four system bus transaction types: read, write, exchange, and nut.

- Read and write transactions consist of a command/address cycle followed by two data cycles.

- Exchange transactions are used to replace the cache block when a cache block resource conflict occurs. They consist of a command/address cycle followed by four data cycles: two writes and two reads.
- Nut transactions consist of a command/address cycle and two dummy data cycles for which no data is transferred.

4.2 Error Logging and Event Log Entry Format

The Digital UNIX and OpenVMS error handlers can generate several entry types. All error entries, with the exception of correctable memory errors, are logged immediately. Entries can be of variable length based on the number of registers within the entry.

4.3 Event Record Translation

Systems running Digital UNIX and OpenVMS operating systems use the DECevent Translation and Reporting Utility to translate events into ASCII reports derived from system event entries (bit-to-text translations).

At product introduction AlphaServer 2100A systems are not supported by the DECevent Translation and Reporting Utility.

4.4 Error Log Analysis–Interpreting System Faults

System faults are isolated by examining translated system error logs or using the DECevent Analysis and Notification Utility.

At product introduction AlphaServer 2100A systems are not supported by the DECevent Analysis and Notification Utility.

5

System Configuration and Setup

This chapter provides configuration and setup information for AlphaServer 2100A systems and system options.

- Section 5.1 describes how to examine the system configuration using the console firmware.
  - Section 5.1.1 describes the function of the two firmware interfaces used with AlphaServer systems.
  - Section 5.1.2 describes how to switch between firmware interfaces.
  - Sections 5.1.3 and 5.1.4 describe the commands used to examine system configuration for each firmware interface.
- Section 5.2 describes the system bus configuration.
- Section 5.3 describes the function of the system bus motherboard.
- Section 5.4 describes the EISA bus.
- Section 5.5 describes how ISA options are compatible on the EISA bus.
- Section 5.6 describes the EISA Configuration Utility (ECU).
- Section 5.7 describes the PCI bus.
- Section 5.8 describes how to configure and install SCSI drives in the system.
- Section 5.9 describes power supply configurations.
- Section 5.10 describes the console port configurations.

5.1 Verifying System Configuration

Figures 5–1 and 5–2 illustrate the system architecture for each AlphaServer 2100A system.

- Figure 5–1 shows the AlphaServer 2100A-series system, which uses the BA740-B9 pedestal enclosure.
- Figure 5–2 shows AlphaServer 2100A RM/CAB systems, which use the BA744-A9 rackmount enclosure.

Figure 5–1 System Architecture: AlphaServer 2100A (BA740-B9 Enclosure)

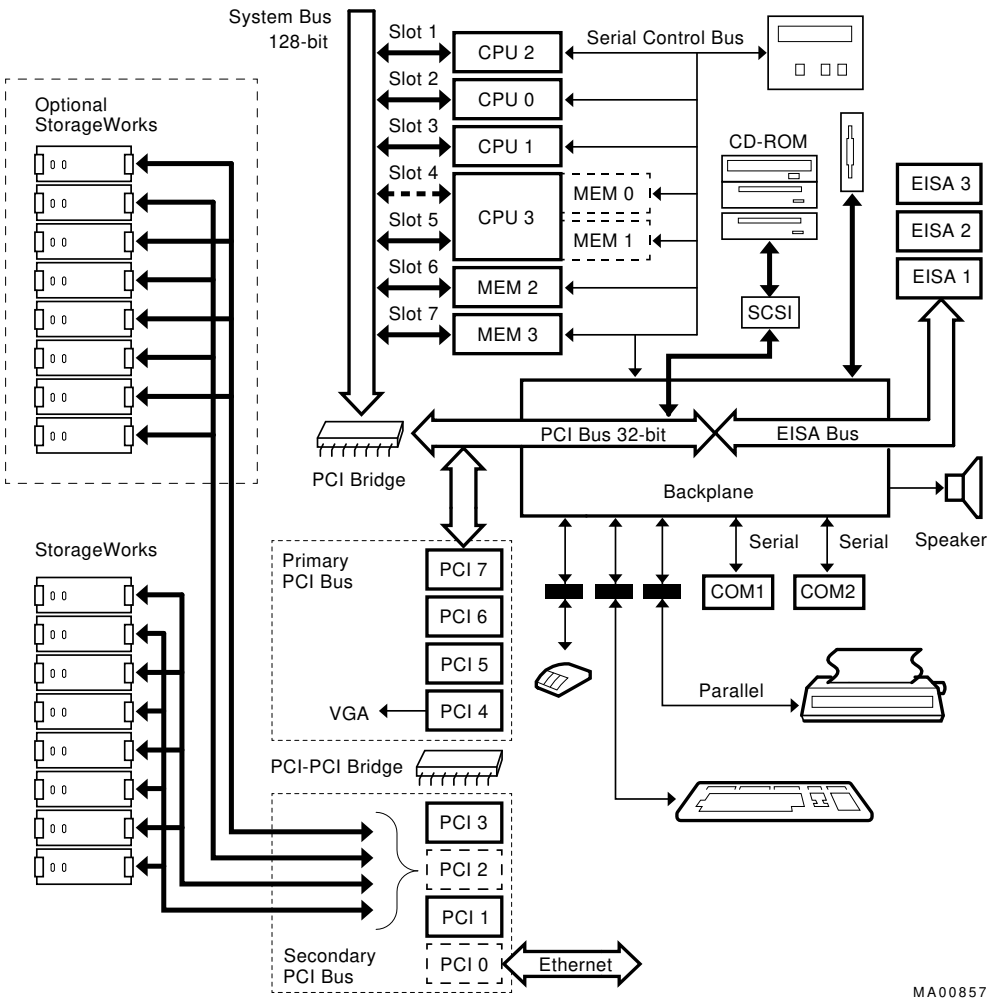

Figure 5–2 System Architecture: AlphaServer 2100A RM and 2100A CAB (BA744-A9 Enclosure)

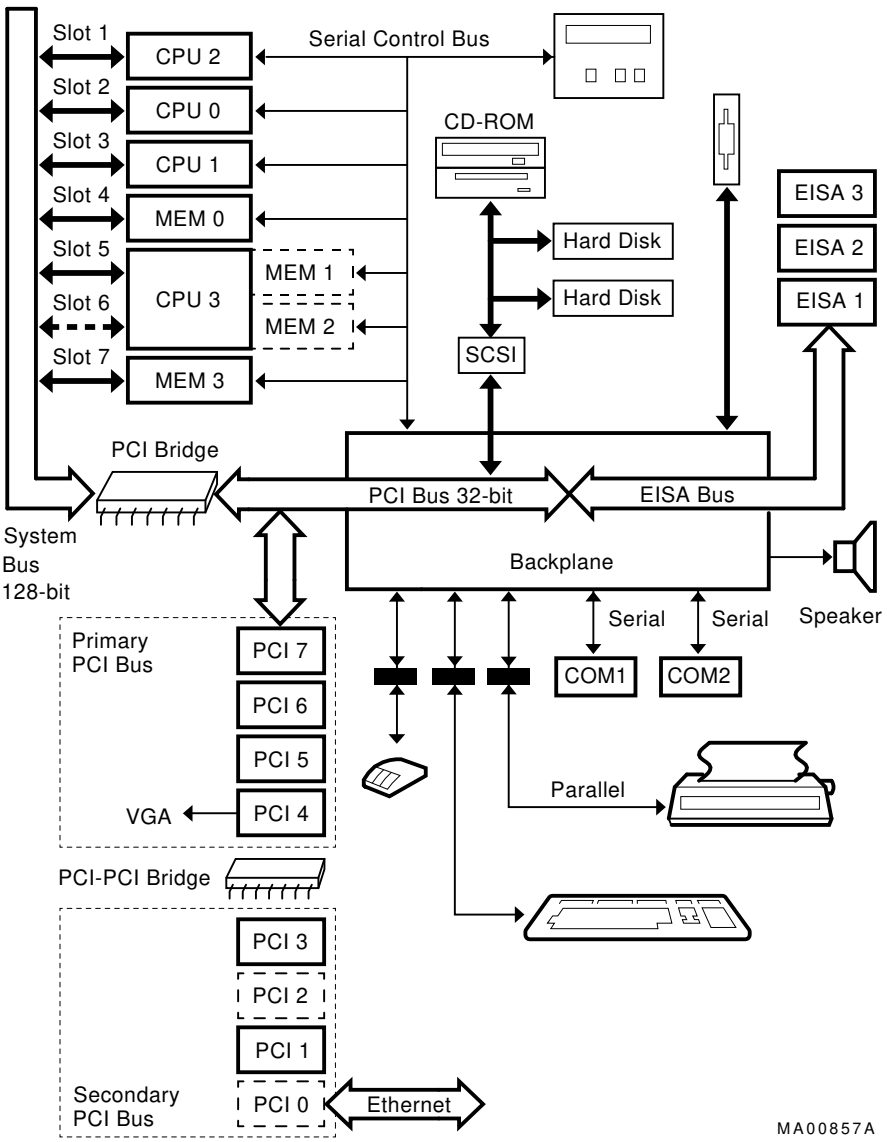

5.1.1 System Firmware

AlphaServer 2100A system firmware provides support for the following operating systems:

- Digital UNIX and OpenVMS are supported under the SRM command line interface, which can be serial or graphical. The SRM firmware is in compliance with the *Alpha System Reference Manual* (SRM).
- Windows NT is supported under the ARC menu interface, which is graphical. The ARC firmware is in compliance with the *Advanced RISC Computing Standard Specification* (ARC).

The console firmware provides the data structures and callbacks available to booted programs defined in both the SRM and ARC standards.

SRM Command Line Interface

Systems running Digital UNIX or OpenVMS access the SRM firmware via a command line interface (CLI). The CLI is a UNIX style shell that provides a set of commands and operators, as well as a scripting facility. It allows you to configure and test the system, examine and alter system state, and boot the operating system.

The only thing that you cannot do from the SRM command line interface is run the EISA Configuration Utility (ECU) or Raid Configuration Utility (RCU). To run the ECU, you must enter the `ecu` command. This will boot the ARC firmware and the ECU software. For more information about running the ECU, refer to Section 5.6.

ARC Menu Interface

Systems running Windows NT access the ARC console firmware via menus that are used to configure, boot the system, run the EISA Configuration Utility (ECU), run the RAID Configuration Utility (RCU), or set environment variables.

There are several tasks that you cannot perform from the ARC menu interface. However, you can perform these tasks from the SRM console command line interface. The table below describes the task, the SRM command used to perform that task, and where to find more information about the SRM command.

Table 5–1 SRM-Only Console Tasks

Task	Command	Reference
Test the system (other than self-tests at system startup)	All system tests and exercisers	Chapter 3

Examine and verify options that are recognized by the system	`show config`
	`show device`
	`show mem`
	`show fru`
		Section 5.1.4

Set or change some environment variables, notably the following:
• Ethernet device type
• Speed for Fast SCSI devices
• Bus probe algorithm type
	`set ew*o_mode`
	`set pk*0_fast`
	`set bus_probe_algorithm`
		Table 5–5

5.1.2 Switching Between Interfaces

For a few procedures it is necessary to switch from one console interface to the other.

- The `test` command is run from the SRM interface.
- The EISA Configuration Utility (ECU) and the RAID Configuration Utility (RCU) are run from the ARC interface.

Switching from SRM to ARC

Two SRM console commands are used to switch to the ARC console:

- The `arc` command loads the ARC firmware and switches to the ARC menu interface.
- The `ecu` command loads the ARC firmware and then boots the ECU diskette.

For systems that boot Windows NT operating systems, return to the ARC console by setting the os_type environment variable to NT, then enter the `init` command:

```
>>> set os_type NT
>>> init
```

Switching from ARC to SRM

Switch from the ARC console to the SRM console as follows:

1. From the Boot menu, select the Supplementary menu.
2. From the Supplementary menu, select ''Set up the system.''
3. From the Setup menu, select ''Switch to OpenVMS or UNIX console.''
4. Select your operating system, then select the Setup menu and press Enter.
5. When the ''Power-cycle the system to implement the change'' message is displayed, press the Reset button. Once the console firmware is loaded and the system is initialized, the SRM console prompt, P00>>>, is displayed.

Once the console firmware is loaded and device drivers are initialized, you can boot the operating system.

5.1.3 Verifying Configuration: ARC Menu Options for Windows NT

The following ARC menu options are used to verify system configuration on systems running the Microsoft Windows NT operating system.

- The `Display hardware configuration` item on the Supplementary menu display the ARC boot device names for devices installed in the system (Section 5.1.3.1).
- `Set default environment variables` item on the Setup menu allows you to select values for Windows NT firmware environment variables (Section 5.1.3.2).

5.1.3.1 Display Hardware Configuration

The hardware configuration display lists the ARC firmware device names of the boot devices installed in the system.

Table 5–2 lists the steps to view the Display hardware configuration display on systems running the Microsoft Windows NT operating system.

Table 5–2 Listing the ARC Firmware Device Names

Step	Action	Result
1	If necessary, access the Supplementary menu.	The system displays the Supplementary menu.

(continued on next page)

Table 5–2 (Cont.) Listing the ARC Firmware Device Names

Step	Action	Result
2	Choose Display hardware configuration and press Enter.	The system displays the hardware configuration display.

The hardware configuration display provides the following information:

- The first screen displays system information, such as the memory, CPU type, speed, NVRAM usage, the ARC version time stamp, and the type of video option detected.
- The second screen displays devices detected by the firmware, including the monitor, keyboard, serial ports and devices on the SCSI bus. Tape devices are displayed, but cannot be accessed from the firmware.
- The third screen contains the PCI slot information: bus number, device number, function number, vendor ID, revision ID, interrupt vector and devices type. All PCI network cards are displayed.
- The fourth screen contains the EISA slot information: slot, device, and identifier. All EISA network cards are displayed.

Sample Hardware Configuration Display:

```
Alpha Processor and System Information:

  Processor ID       21164
  Processor Revision 2.2
  System Revision    0x0
  Processor Speed    250.00 MHz
  Physical Memory    512 MB

Extended Firmware Information:

   Version: 4.43 951101.1202

   NVRAM Environment Usage: 52%
      (540 of 1024 bytes)

Video Option detected:

  24 Plane Frame Buffer video card:  ZLXp-E2

 Press any key to continue...
                                          Monday, 11-13-1995  5:05:38 PM
Devices detected by the firmware:
```

```
   eisa(0)video(0)monitor(0)
   multi(0)key(0)keyboard(0)
   eisa(0)disk(0)fdisk(0)     (Removable)
   multi(0)serial(0)
   multi(0)serial(1)
   scsi(0)disk(1)rdisk(0)     (RAW)           DEC     RZ28     (C) DECD41C
   scsi(0)disk(2)rdisk(0)     (RAW)           DEC     RZ28     (C) DECD41C
   scsi(0)disk(3)rdisk(0)     (RAW)           DEC     RZ28B    (C) DEC0006~~
** scsi(0)tape(5)tape(0)                      DEC     TLZ06    (C)DEC0491
   scsi(0)cdrom(6)fdisk(0)    (Removable)     DEC     RRD43    (C) DEC 1084
   scsi(1)disk(8)rdisk(0)     (2 Partitions)  MYLEX DAC960
   scsi(1)disk(9)rdisk(0)     (RAW)           MYLEX DAC960
   scsi(1)disk(10)rdisk(0)    (RAW)           MYLEX DAC960

 ** --> Devices detected but not supported by the firmware.

 Press any key to continue...
                                          Monday, 11-13-1995  5:05:38 PM

PCI slot information:

    Bus  Device Function  Vendor Device Revision  Interrupt    Device
  Number Number  Number     ID     ID      ID      Vector       Type
  ------ ------ --------  ------ ------ --------  ---------  ----------
     0      0       0      1011      2     23        22      Ethernet
     0      1       0      1000      1      1        21      SCSI
     0      2       0      8086    482      3         0      EISA bridge
     0      7       0      1011      4      3        24      Video card

 Press any key to continue...

       Monday, 11-13-1995  5:05:38 PM
EISA slot information:

  Slot    Device          Identifier
    0     Other           DEC2A01
    4     Display         PHI8041
    6     Unknown         ADP0001
    7     Disk            MLX0075
    0     Disk            FLOPPY

 Press any key to continue...
       Monday, 11-13-1995  5:05:38 PM

 Copyright (c) 1993-1995 Microsoft Corporation
 Copyright (c) 1993-1995 Digital Equipment Corporation
```

Table 5–3 describes the meaning of these device names.

Note

The available boot devices display marks tape devices as not used by the firmware. All PCI and EISA network cards are listed under the PCI and

EISA screen displays.

Table 5–3 ARC Firmware Device Names

Name	Description
multi(0)key(0)keyboard(0) multi(0)serial(0) multi(0)serial(1)	The multi( ) devices are located on the system module. These devices include the keyboard port and the serial line ports.
eisa(0)video(0)monitor(0) eisa(0)disk(0)fdisk(0)	The eisa( ) devices are provided by devices on the EISA bus. These devices include the monitor and the floppy drive.
scsi(0)disk(0)rdisk(0) scsi(0)cdrom(5)fdisk(0)	The scsi( ) devices are SCSI disk or CD–ROM devices. These examples represent SCSI devices on SCSI bus A. The disk drive is set to SCSI ID 0 and the CD–ROM drive is set to SCSI ID 5. Both devices have logical unit numbers of 0.

5.1.3.2 Set Default Variables

The Set default environment variables option of the Setup menu sets and displays the default Windows NT firmware environment variables.

Caution

Do not edit or delete the default firmware Windows NT environment variables. This can result in corrupted data or make the system inoperable. To modify the values of the environment variables, use the menu options on the ‘‘Set up the system’’ menu.

Table 5–4 lists and explains the default ARC firmware environment variables.

Table 5–4 ARC Firmware Environment Variables

Variable	Description
A:	The default floppy drive. The default value is eisa( )disk( )fdisk( ).
AUTOLOAD	The default startup action, either YES (boot) or NO or undefined (remain in ARC firmware).

(continued on next page)

Table 5–4 (Cont.) ARC Firmware Environment Variables

Variable	Description
CONSOLEIN	The console input device. The default value is multi( )key( )keyboard( )console( ).
CONSOLEOUT	The console output device. The default value is eisa( )video( )monitor( )console( ).
COUNTDOWN	The default time limit in seconds before the system boots automatically when AUTOLOAD is set to yes. The default value is 10.
ENABLEPCIPARITY-CHECKING	When set to the default value (FALSE), disables parity checking on the PCI bus in order to prevent machine check errors that can occur if the PCI device has not properly set the parity on the bus. Also allows the peripheral devices that do not fully conform to the PCI specification to be used without generating parity errors.
FLOPPY	The capacity of the default floppy drive, either 1 (1.2 MB), 2 (1.44 MB), or 3 (2.88 MB).
FLOPPY2	The capacity of an optional second floppy drive, either N (not installed), 1, 2, or 3.
FWSEARCHPATH	The search path used by the ARC firmware and other programs to locate particular files. The default value is the same as the SYSTEMPARTITION environment variable value.
KEYBOARDTYPE	The keyboard language. The default is U.S. (English).
TIMEZONE	The time zone in which the system is located. This variable accepts ISO/IEC9945-1 (POSIX) standard values.
VERSION	The firmware version.

Note

The operating system or other programs, for example, the ECU, may create either temporary or permanent environment variables for their own use. Do not edit or delete these environment variables.

5.1.4 Verifying Configuration: SRM Console Commands for Digital UNIX and OpenVMS

The following SRM console commands are used to verify system configuration on Digital UNIX and OpenVMS systems:

- `show config` (Section 5.1.4.1)—Displays the buses on the system and the devices found on those buses.
- `show device` (Section 5.1.4.2)—Displays the devices and controllers in the system.
- `show memory` (Section 5.1.4.3)—Displays main memory configuration.
- `set` and `show` (Section 5.1.4.4)—Set and display environment variable settings.

5.1.4.1 show config

The `show config` command displays all devices found on the system bus (CPU and memory), PCI bus, and EISA bus. You can use the information in the display to identify target devices for commands such as `boot` and `test`, as well as to verify that the system sees all the devices that are installed.

The configuration display includes the following:

- Component, Status, and Module ID:

  These columns display the core system, including CPUs, memory, and I/O, and indicate their power-up status: P (pass) or F (fail).

- Hose 0, Bus 0, PCI:

  All controllers on Hose 0, Bus 0 of the primary PCI bus. The logical slot numbers are listed in the left column of the display.

  – Slot 0–1 = Reserved

  – Slot 2 = PCI to EISA bridge chip

  – Slot 3 = PCI to PCI bridge chip

  – Slots 4–5 = Reserved

  – Slots 6–9 = Correspond to physical PCI card cage slots on the primary PCI bus:

    Slot 6 = PCI4
    Slot 7 = PCI5
    Slot 8 = PCI6
    Slot 9 = PCI7

    In the case of storage controllers, the devices off the controller are also displayed.

- Hose 0, Bus 1, EISA:

  All controllers on Hose 0, Bus 1 of the EISA bus. The logical slot numbers in the left column of the display correspond to physical EISA card cage slots 1–3.

  In the case of storage controllers, the devices off the controller are also displayed.

- Hose 0, Bus 2, PCI:

  All controllers on Hose 0, Bus 2 of the secondary PCI bus. The logical slot numbers are listed in the left column of the display.

  – Slot 0, 2–5 = Reserved

- Slot 1 = SCSI controller on the system backplane, along with storage drives on the bus.
- Slots 6–9 = Correspond to physical PCI card cage slots on the secondary PCI bus:

  Slot 6 = PCI0
  Slot 7 = PCI1
  Slot 8 = PCI2
  Slot 9 = PCI3

  In the case of storage controllers, the devices off the controller are also displayed.

For more information on device names, refer to Section 5.1.4.2, show device.

Synopsis:

show config

Example Using AlphaServer 2100A System:

```
P00>>> show config

                       Digital Equipment Corporation
                          AlphaServer 2100A 5/300

SRM Console T4.3-134  VMS PALcode V1.15-3, OSF PALcode V1.18-2

Component       Status          Module ID
CPU 0              P            B2020-BA DECchip (tm) 21164-1
CPU1     P  B2020-BA DECship (tm) 21164-1
Memory 0           P            B2021-CA   128 MB
Memory 1    P  B2021-CA   128 MB
I/O                             B2222-AA
                                dva0.0.0.1000.1   RX26

 Slot   Option                  Hose 0, Bus 0, PCI
   2    Intel 82375EB      Bridge to Bus 1, EISA
   3    DECchip 21050-AA     Bridge to Bus 2, PCI
   7    DECchip 21050-AA                          Bridge to Bus 3, PCI
   9    S3 Trio64/Trio32

 Slot   Option                  Hose 0, Bus 1, EISA
   1    DEC4220

 Slot   Option                  Hose 0, Bus 2, PCI
   1    NRC 53C810              pka0.7.0.2001.0   SCSI Bus ID 7
                                dka0.0.0.2100.0   RZ28
                                dka600.6.0.2001.0 RRD43
                                mka400.4.0.2001.0 TLZ06
                                mka500.5.0.2001.0 TZK11

 Slot   Option                  Hose 0, Bus 3, PCI
   0    DECchip 21040-AA        ewa0.0.0.3000.0   08-002B-E4-AE-A4
        Qlogic ISP1020          pkb0.7.0.3001.0   SCSI Bus ID 7
                                dkb0.0.0.3001.0   RZ28
                                dkb100.1.0.3001.0 RZ28
                                dkb200.2.0.3001.0 RZ26L
P00>>>
```

5.1.4.2 show device

The `show device` command displays the devices and controllers in the system. The device name convention is shown in Figure 5–3.

Figure 5–3 Device Name Convention

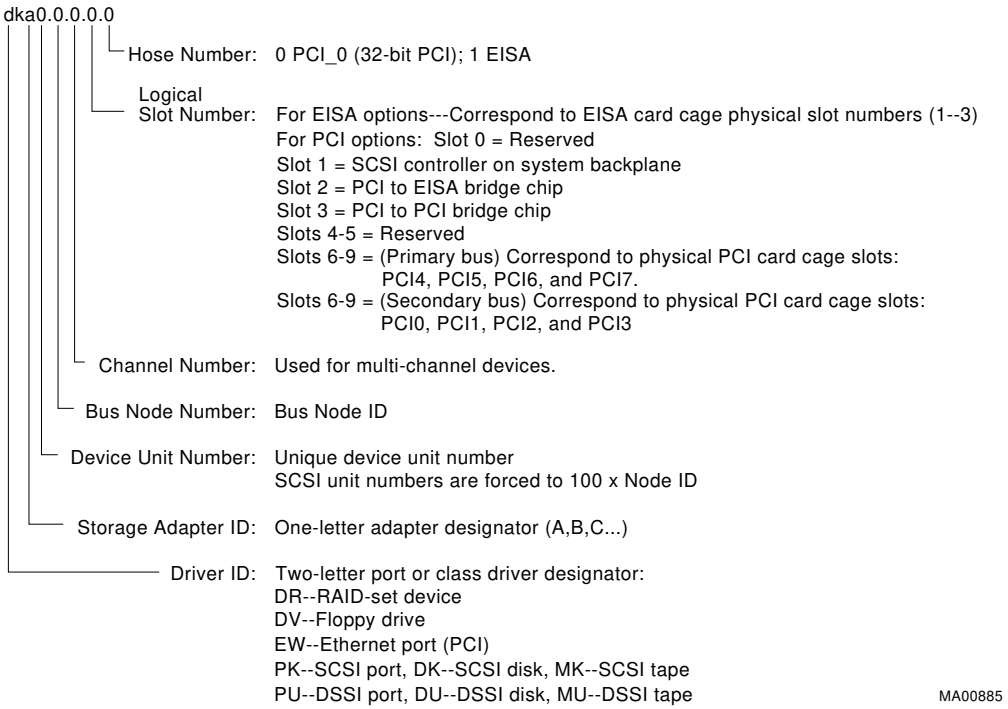

Synopsis:

show device [device_name]

Arguments:

[device_name] The device name or device abbreviation. When abbreviations or wildcards are used, all devices that match the type are displayed.

Examples:

```
P00>>> show device
    ❶                      ❷       ❸                    ❹   ❺
dka0.0.0.2001.0           DKA0                         RZ28   435E
dka600.6.0.2001.0         DKA600                       RRD43  1084
dka0.0.0.1000.0           DVA                          RZ26
mka400.4.0.2001.0         MKA400                       TLZ06  0435
mka500.5.0.2001.0         MKA500                       TZK11  00A1
ewa0.0.0.3000.0           EWA0             08-00-2B-E2-70-49
pka0.7.0.2001.0           PKA0                 SCSI Bus ID 7
>>> show device dk pk
pka0.7.0.3001.0           PKB0                 SCSI Bus ID 7  2.02
pkc0.7.0.3002.0           PKC0    SCSI Bus ID 7
P00>>>
```

❶ Full console device name

❷ Abbreviated device name

❸ Node name. An alphanumeric node name of up to 6 characters can be set. (not shown)

❹ Device type

❺ Firmware version (if known)

5.1.4.3 show memory

The `show memory` command displays information for each memory module in the system.

Synopsis:

`show memory`

Examples:

```
P00>>> show memory
  ❶      ❷       ❸         ❹          ❺        ❻
Module   Size    Base Addr   Intlv Mode  Intlv Unit  Status
------   -----   ---------   ----------  ----------  ------
  0      128MB   00000000      1-Way         0       Passed

Total Bad Pages 0 ❼
P00>>>
```

❶ Module slot number

❷ Size of memory module

❸ Base or starting address of memory module

❹ Interleave mode—number of modules interleaved (1–4-way interleaving)

❺ Interleave unit number

❻ Status (passed, failed, or not configured)

❼ Number of bad pages in memory (8 KB/page)

5.1.4.4 Setting and Showing Environment Variables

The environment variables described in Table 5–5 are typically set when you are configuring a system. For a complete review of environment variables, including SRM console firmware security features, refer to the *AlphaServer 2000/2100 /2100A Firmware Reference Guide*, EK-AXPFW-RM.

Synopsis:

set [-default] [-integer] -[string] envar value

Note

Whenever you use the `set` command to reset an environment variable, you must initialize the system to put the new setting into effect. You initialize the system by entering the `init` command or pressing the Reset button.

show envar

Arguments:

envar	The name of the environment variable to be modified.
value	The value that is assigned to the environment variable. This may be an ASCII string.

Options:

-default	Restores variable to its default value.
-integer	Creates variable as an integer.
-string	Creates variable as a string (default).

Examples:

```
>>> set bootdef_dev dka0
>>> show bootdef_dev
dka0
>>> show auto_action
boot
>>> set boot_osflags 0,1
>>>
```

Table 5–5 Environment Variables Set During System Configuration

Variable	Attributes	Function
auto_action	NV,W	The action the console should take following an error halt or powerfail. Defined values are: BOOT—Attempt bootstrap. HALT—Halt, enter console I/O mode. RESTART—Attempt restart. If restart fails, try boot. No other values are accepted. Other values result in an error message and variable remains unchanged.
bootdef_dev	NV	The device or device list from which booting is to be attempted, when no path is specified on the command line. Set at factory to disk with Factory Installed Software; otherwise null.
boot_file	NV,W	The default file name used for the primary bootstrap when no file name is specified by the `boot` command. The default value when the system is shipped is NULL.

Key to variable attributes:

NV —- Nonvolatile. The last value saved by system software or set by console commands is preserved across system initializations, cold bootstraps, and long power outages.
W —- Warm nonvolatile. The last value set by system software is preserved across warm bootstraps and restarts.

(continued on next page)

Table 5–5 (Cont.) Environment Variables Set During System Configuration

Variable	Attributes	Function
boot_osflags	NV,W	Default additional parameters to be passed to system software during booting if none are specified by the `boot` command. **OpenVMS:** On the OpenVMS AXP operating system, these additional parameters are the root number and boot flags. The default value when the system is shipped is NULL. **Digital UNIX:** The following parameters are used with the Digital UNIX operating system: a Autoboot. Boots /vmunix from bootdef_dev, goes to multiuser mode. Use this for a system that should come up automatically after a power failure. s Stop in single-user mode. Boots /vmunix to single-user mode and stops at the # (root) prompt. i Interactive boot. Request the name of the image to boot from the specified boot device. Other flags, such as -kdebug (to enable the kernel debugger), may be entered using this option. D Full dump, implies ''s'' as well. By default, if Digital UNIX crashes, it completes a partial memory dump. Specifying ''D'' forces a full dump at system crash. Common settings are a, autoboot; and Da, autoboot; but create full dumps if the system crashes.

Key to variable attributes:

NV —- Nonvolatile. The last value saved by system software or set by console commands is preserved across system initializations, cold bootstraps, and long power outages.
W —- Warm nonvolatile. The last value set by system software is preserved across warm bootstraps and restarts.

(continued on next page)

Table 5–5 (Cont.) Environment Variables Set During System Configuration

Variable	Attributes	Function
bus_probe_ algorithm	NV	Specifies a bus probe algorithm for the system. OLD—Systems running OpenVMS V6.1 or earlier must set the bus probe algorithm to old. Failure to do so could result in bugcheck errors when booting from an EISA device. NEW—Systems running Digital UNIX V3.0B or later or OpenVMS V6.2 or later should be set to new. This setting improves the bus sizing and configuration for Digital UNIX systems. Not applicable for systems running Windows NT.
com1_baud or com2_baud	NV	Sets the baud rate of the COM1 or COM2 port. The default baud rate is 9600. Baud rate values are 300, 600, 1200, 2400, 4800, 9600, and 19200.
console	NV	Sets the device on which power-up output is displayed. GRAPHICS—Sets the power-up output to be displayed at a graphics terminal or device connected to the VGA module at the rear of the system. SERIAL—Sets the power-up output to be displayed on the device that is connected to the COM1 port at the rear of the system.

Key to variable attributes:

NV —- Nonvolatile. The last value saved by system software or set by console commands is preserved across system initializations, cold bootstraps, and long power outages.
W —- Warm nonvolatile. The last value set by system software is preserved across warm bootstraps and restarts.

(continued on next page)

Table 5–5 (Cont.) Environment Variables Set During System Configuration

Variable	Attributes	Function
cpu_enabled	NV	Enables or disables a CPU. set cpu_enabled *hex_digit* Sets a bit mask that enables or disables specific CPUs on a multiprocessor system. Disabled CPUs are prevented from running the console or the operating system. Bit 0 of the mask corresponds to CPU 0; bit 1 corresponds to CPU 1, and so on. To enable and disable CPUs, enter the `set cpu_enabled` command followed by the hex digit value for the CPU or CPUs you want to enable or disable. For example, to disable only CPU 1, you would enter the hex digit value ''D.'' This value corresponds to enabling CPU 0, CPU 2, and CPU 3 and disabling CPU 1. The following table lists the hex digit values and corresponding enabled CPUs. 0 No CPUs (CPU 0 still comes up) 1 CPU 0 2 CPU 1 3 CPU 0,1 4 CPU 2 5 CPU 0,2 6 CPU 1,2 7 CPU 0,1,2 8 CPU 3 9 CPU 0,3 A CPU 1,3 B CPU 0,1,3 C CPU 2,3 D CPU 0,2,3 E CPU 1,2,3 F CPU 0,1,2,3 (Default value)

Key to variable attributes:

NV —- Nonvolatile. The last value saved by system software or set by console commands is preserved across system initializations, cold bootstraps, and long power outages.
W —- Warm nonvolatile. The last value set by system software is preserved across warm bootstraps and restarts.

(continued on next page)

Table 5–5 (Cont.) Environment Variables Set During System Configuration

Variable	Attributes	Function
ew*0_mode	NV	Sets the Ethernet controller to the default Ethernet device type. aui—Sets the default Ethernet device to AUI or thinwire. twisted—Sets the default Ethernet device to 10Base-T (twisted-pair). auto—Reads the device connected to the Ethernet port and sets the default to the appropriate Ethernet device type.
ocp_text	NV	Allows you to create an OCP message that displays when power-up diagnostics are completed. The default value is the CPU speed. Enter a message of up to 16 characters. Reset the system or enter the `init` command after setting ocp_text to activate new message.
os_type	NV	Sets the default operating system. ''vms'' or ''unix''—Sets system to boot the SRM firmware. ''nt''—Sets system to boot the ARC firmware.

Key to variable attributes:

NV —- Nonvolatile. The last value saved by system software or set by console commands is preserved across system initializations, cold bootstraps, and long power outages.
W —- Warm nonvolatile. The last value set by system software is preserved across warm bootstraps and restarts.

(continued on next page)

Table 5–5 (Cont.) Environment Variables Set During System Configuration

Variable	Attributes	Function
pci_parity	NV	Disable or enable parity checking on the PCI bus. ON—PCI parity enabled. OFF—PCI parity disabled. Some PCI devices do not implement PCI parity checking, and some have a parity-generating scheme in which the parity is sometimes incorrect or is not fully compliant with the PCI specification. In such cases, the device functions properly as long as parity is is not checked. The default value is ON—PCI parity enabled. **Note** If you disable PCI parity, no parity checking is implemented for any PCI device, even those devices in full compliance with the PCI specification.
pk*0_fast	NV	Enables fast SCSI devices on a SCSI controller to perform in standard or fast mode. 0—Sets the default speed for devices on the controller to standard SCSI. If a controller is set to standard SCSI mode, both standard and Fast SCSI devices will perform in standard mode. 1—Sets the default speed for devices on the controller to Fast SCSI mode (Default). Devices on a controller that connect to both standard and Fast SCSI devices will automatically perform at the appropriate rate for the device, either fast or standard mode.

Key to variable attributes:

NV —- Nonvolatile. The last value saved by system software or set by console commands is preserved across system initializations, cold bootstraps, and long power outages.
W —- Warm nonvolatile. The last value set by system software is preserved across warm bootstraps and restarts.

(continued on next page)

Table 5–5 (Cont.) Environment Variables Set During System Configuration

Variable	Attributes	Function
pk*0_host_id	NV	Sets the controller host bus node ID to a value between 0 and 7. 0–7—Assigns bus node ID for specified host adapter.
pk*0_soft_term	NV	Enables or disables SCSI terminators. This environment variable applies to systems using the QLogic ISP1020 SCSI controller. The QLogic ISP1020 SCSI controller implements the 16-bit wide SCSI bus. The QLogic module has two terminators, one for the 8 low bits and one for the high 8 bits. There are five possible values: off—Turns off both low 8 bits and high 8 bits. low—Turns on low 8 bits and turns off high 8 bits. high—Turns on high 8 bits and turns of low 8 bits. on—Turns on both low 8 bits and high 8 bits. diff—Places the bus in differential mode.

Key to variable attributes:

NV —- Nonvolatile. The last value saved by system software or set by console commands is preserved across system initializations, cold bootstraps, and long power outages.
W —- Warm nonvolatile. The last value set by system software is preserved across warm bootstraps and restarts.

(continued on next page)

Table 5–5 (Cont.) Environment Variables Set During System Configuration

Variable	Attributes	Function
tga_sync_green	NV	Sets the location of the SYNC signal generated by the ZLXp-E PCI graphics accelerator (PBXGA). This environment variable must be set correctly so that the graphics monitor will synchronize. The parameter is a bit mask, where the least significant bit (LSB) sets the vertical SYNC for the first graphics card found, the second for the second found, and so on. The command `set tga_sync_green 00` sets all graphics cards to synchronize on a separate vertical SYNC line, as required by some monitors. See the monitor documentation for all other information. ff—Synchronizes the graphics monitor on systems that do not use a ZLXp-E PCI graphics accelerator (default setting). 00—Synchronizes the graphics monitor on systems with a ZLXp-E PCI graphics accelerator.
tt_allow_login	NV	Enables or disables login to the SRM console firmware on alternative console ports. 0—Disables login on alternative console ports. 1—Enables login on alternative console ports (default setting). If the console output device is set to ''serial'', `set tt_allow_login 1` allows you to log in on the primary COM1 port, or alternate COM2 port, or the graphics monitor. If the console output device is set to ''graphics'', `set tt_allow_login 1` allows you to log in through either the COM1 or COM2 console port.

Key to variable attributes:

NV —- Nonvolatile. The last value saved by system software or set by console commands is preserved across system initializations, cold bootstraps, and long power outages.
W —- Warm nonvolatile. The last value set by system software is preserved across warm bootstraps and restarts.

Note

Whenever you use the `set` command to reset an environment variable, you must initialize the system to put the new setting into effect. Initialize

the system by entering the `init` command or pressing the Reset button.

5.2 System Bus Options

The system bus interconnects the CPUs and memory modules. It is the hardware structure through which data processed by the microprocessor is transferred throughout the system.

- Figure 5–4 shows the location of the system bus and card cage for 2100A-series systems, which use the BA740-B9 enclosure.
- Figure 5–5 shows the location of the system bus and card cages for 2100A RM and 2100A CAB-series systems, which use the BA744-A9 enclosure.

Figure 5–4 Card Cage and Bus Locations, Pedestal (BA740-B9)

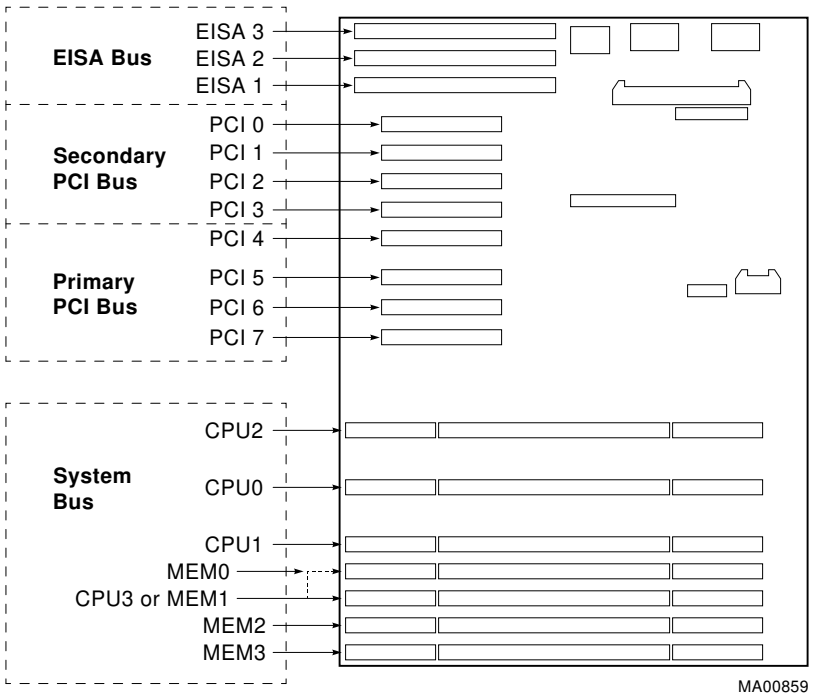

Figure 5–5 Card Cages and Bus Locations, Rackmount (BA744-A9)

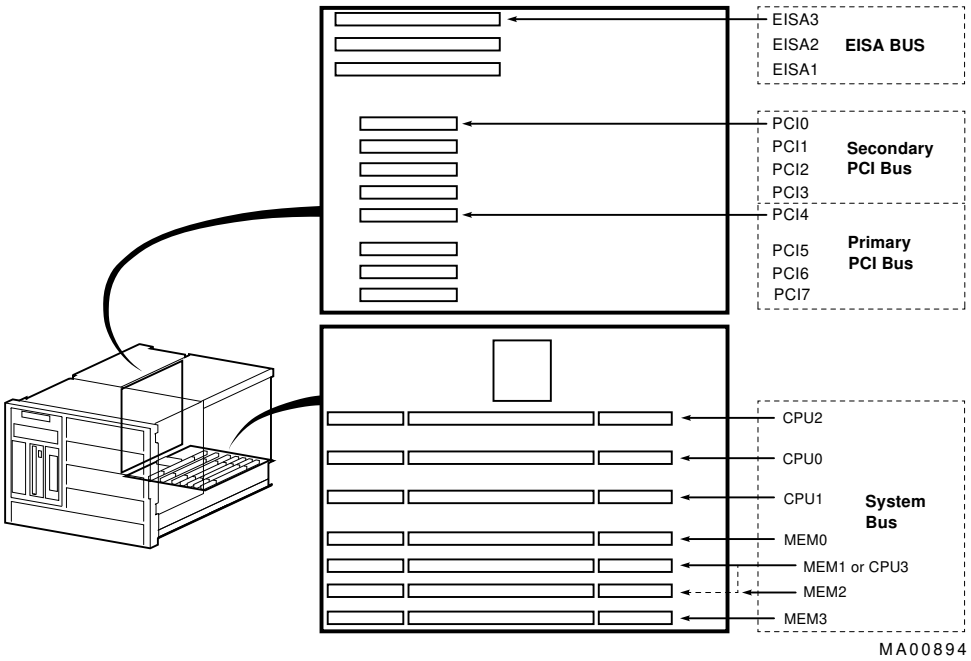

5.2.1 CPU Modules

AlphaServer 2100A systems can support up to four CPUs in a symmetric multiprocessing (SMP) configuration. Configure the CPUs exactly as shown in Figure 5–6 and Figure 5–7. Also make note of the following requirements:

- Systems using BA740-B9 and BA744-A9 enclosures must have a CPU module installed in system bus slot 2 (CPU 0).
- Pedestal systems (BA740-B9 enclosure) with more than two CPUs require a second power supply.
- When installing four CPUs, install the fourth CPU in slot MEM 1. The fourth CPU displaces memory in slots MEM 0 and MEM 1 (Figure 5–6 and Figure 5–7).

Figure 5–6 System Bus Configurations According to Number of CPUs, Pedestal (BA740-B9)

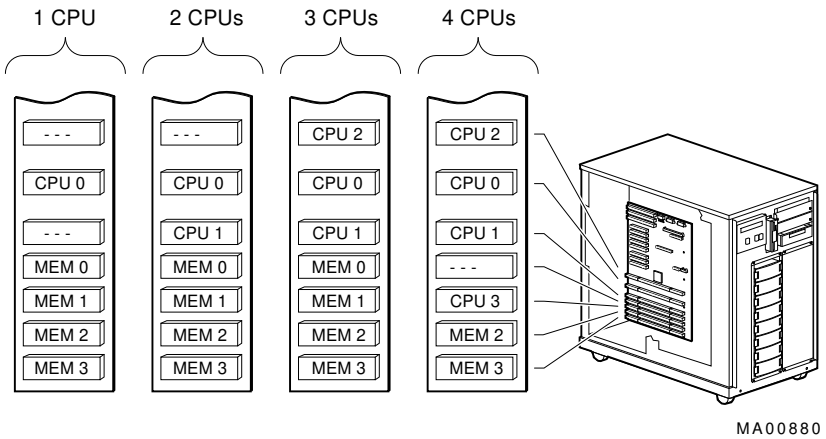

Warning: CPU and memory modules have parts that operate at high temperatures. Wait two minutes after power is removed before handling these modules.

Figure 5–7 System Bus Configurations According to Number of CPUs, Rackmount (BA744-A9)

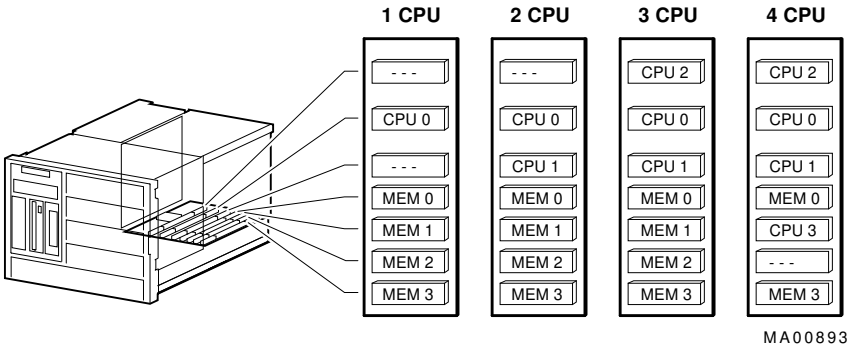

Warning: CPU and memory modules have parts that operate at high temperatures. Wait two minutes after power is removed before handling these modules.

5.2.2 Memory Modules, Pedestal (BA740-B9) and Rackmount (BA744-A9) Systems

AlphaServer 2100A systems can support up to four memory modules (for a maximum memory capacity of 2 GB). A minimum of one memory module is required.

Memory is available in three variations:

– MS450–BA (B2021–BA) 64-MB, 80-ns memory

– MS451–DA (B2022–DA) 128-MB, 80-ns memory

– MS451–FA (B2022–FA) 512-MB, 80-ns memory

5.3 System Backplane (BA740-B9) or PCI/EISA Backplane (BA744-A9)

The system backplane (pedestal systems) or PCI/EISA backplane (rackmount systems) provides a standard set of I/O functions, including:

- A Fast SCSI-2 controller chip that supports removable-media devices
- The firmware console subsystem on 1 MB of Flash ROM
- A floppy drive controller (supports up to two floppy drives)
- Two serial ports with full modem control and the parallel port
- The keyboard and mouse interface
- The speaker interface
- PCI-to-EISA bridge chip set
- PCI-to-PCI bridge chip set
- Time-of-year (TOY) clock
- Serial control bus controller
- NVRAM chip

5.4 EISA Bus Options

The EISA bus (Extended Industry Standard Architecture bus) is a 32-bit industry standard I/O bus. EISA is a superset of the well-established ISA bus. EISA was designed to accept newer 32-bit components while still remaining compatible with older 8-bit and 16-bit cards.

EISA offers performance of up to 33 MB/sec for bus masters and DMA devices. Up to three cards can be installed—EISA, ISA, or a combination of the two—in the EISA bus portion of the card cage. All slots are bus master slots. EISA slots can be filled in any order.

Warning: For protection against fire, only modules with current-limited outputs should be used.

5.5 ISA Bus Options

The ISA bus (Industry Standard Architecture) is an industry-standard, 16-bit I/O bus. The EISA bus is a superset of the well-established ISA bus and is backward compatible with 16-bit and 8-bit architecture. Therefore, ISA modules can be used in AlphaServer 2100A systems, provided the operating system supports the device and enough system resources are available to to configure the device.

Up to three cards—EISA, ISA, or a combination of the two—in the EISA bus portion of the card cage. Refer to Section 5.6 for information on using the EISA Configuration Utility (ECU) to configure ISA options.

Warning: For protection against fire, only modules with current-limited outputs should be used.

5.5.1 Identifying ISA and EISA options

By examining the contacts of the option board, you can distinguish between EISA or ISA options (Figure 5–8):

- ISA boards have one row of contacts and no more than one gap.
- EISA boards have two interlocking rows of contacts with several gaps.

Figure 5–8 ISA and ISA Boards

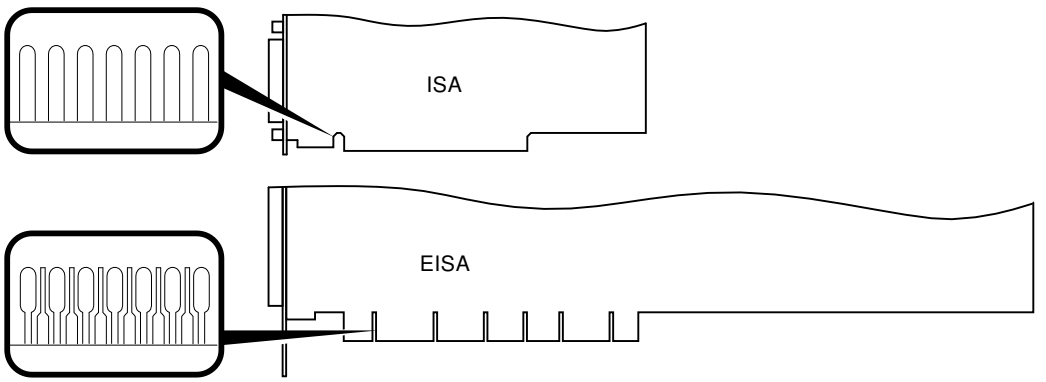

5.6 EISA Configuration Utility

Whenever you add or move EISA options, or some ISA options in the system, you must run a utility called the EISA Configuration Utility (ECU). Each EISA or ISA option has a corresponding configuration (CFG) file, which describes the characteristics and the system resources required for that option. The ECU uses the CFG file to create a conflict-free configuration.

The ECU is a menu-based utility that provides online help to guide you through the configuration process. The ECU is run from the ARC menu interface.

The ECU is supplied on the System Configuration Diskette shipped with the system. You should make a backup copy of the system configuration diskette and keep the original in a safe place. Use the backup copy when you are configuring the system. The system configuration diskette must have the volume label SYSTEMCFG.

Note

The CFG files supplied with the option you want to install may not work on this system if the option is not supported. Before you install and option, check that the system supports the option.

5.6.1 Before You Run the ECU

Before running the ECU:

1. Install EISA option(s). (You install ISA boards after you run the ECU.)

   For information about installing a specific option, refer to the documentation for that option.

2. Familiarize yourself with the utility.

   You can find more information about the ECU by reading the ECU on-line help. To read the online help, start the ECU (refer to Section 5.6.2). Online help for the ECU is located under Step 1, ''Important EISA Configuration Information.''

3. Familiarize yourself with the configuration procedure for the system:

   - If you are configuring an EISA bus that contains only EISA options, refer to Table 5–7.
   - If you are configuring an EISA bus that contains both ISA an EISA options, refer to Table 5–8.

4. Locate the correct ECU diskette for your operating system. (The ECU diskette is shipped in the accessories box with the system.) Make a backup copy of the configuration diskette, using a utility such as the Microsoft Windows File Manager (Select Copy Disk... from the Disk menu.)

   Use the backup copy when you are configuring the system. The system configuration diskette must have the volume label SYSTEMCFG.

   - ECU Diskette DECpc AXP (AK-PYCJ*-CA) for Microsoft Windows NT
   - ECU Diskette DECpc AXP (AK-Q2CR*-CA) for Digital UNIX and OpenVMS

5.6.2 How to Start the ECU

Complete the following steps to run the ECU:

1. Invoke the console firmware.

   - **For systems running Windows NT**—Shut down the operating system or power up to the console Boot menu.
   - **For systems running Digital UNIX or OpenVMS**—Shut down the operating system and press the Halt button or power up with the Halt button set to the ''in'' position. When the console prompt P00>>> is displayed, set the halt button to the ''out'' position.

2. Start the ECU as follows:

Note

Make sure the ECU diskette is not write-protected.

- **For systems running Windows NT**—Select the following menus:
  a. From the Boot menu, select the Supplementary menu.
  b. From the Supplementary menu, select the Setup menu. Insert the ECU diskette for Windows NT (AK-PYCJ*-CA) into the floppy drive.
  c. From the Setup menu, select ''Run EISA configuration utility from floppy.'' This boots the ECU program.
- **For systems running Digital UNIX or OpenVMS**—Start the ECU as follows:
  a. Insert the ECU diskette for Digital UNIX or OpenVMS (AK-Q2CR*-CA) into the floppy drive.
  b. Enter the `ecu` command.

     The systems displays ''loading ARC firmware.'' When the firmware has finished loading, the ECU program is booted.

3. Complete the ECU procedure according to the guidelines provided in the following sections.
   - If you are configuring an EISA bus that contains only EISA options, refer to Table 5–7.

Note

If you are configuring only EISA options, do not perform Step 2 of the ECU, ''Add or remove boards.'' (EISA boards are recognized and configured automatically.)

   - If you are configuring an EISA bus that contains both ISA and EISA options, refer to Table 5–8.
4. After you have saved configuration information and exited from the ECU:
   - **For systems running Windows NT**—Remove the ECU diskette from the floppy drive and boot the operating system.

- **For systems running Digital UNIX or OpenVMS**—Remove the ECU diskette from the floppy drive. Return to the SRM console firmware as follows:

  a. From the Boot menu, select the Supplementary menu.

  b. From the Supplementary menu, select ''Set up the system.'' The Setup menu is then displayed.

  c. From the Setup menu, select ''Switch to OpenVMS or Digital UNIX console.''

  d. Select your operating system console, then press Enter on ''Setup menu.''

  e. When the ''Power-cycle the system to implement the change'' message is displayed, press the Reset button. (Do not press the DC On/Off button.) Once the console firmware is loaded and device drivers are initialized, you can boot the operating system.

5. Verify that the new options are configured correctly.

5.6.3 Configuring EISA Options

EISA boards are recognized and configured automatically. Table 5–7 summarixes the steps necessary to configure an EISA bus that contains no ISA options. Review Section 5.6.1. Then run the ECU as described in Section 5.6.2.

Note

It is not necessary to run Step 2 of the ECU, ''Add or remove boards.'' (EISA boards are recognized and configured automatically.)

Table 5–7 Summary of Procedure for Configuring EISA Bus (EISA Options Only)

Step	Explanation
Install EISA option.	Use the instructions provided with the EISA option.
Power up and run ECU.	If the ECU locates the required CFG configuration files, it displays the main menu. The CFG file for the option may reside on a configuration diskette packaged with the option or may be included on the system configuration diskette. **Note** It is not necessary to run Step 2 of the ECU, ''Add or remove boards.'' (EISA boards are recognized and configured automatically.)
View or Edit Details (optional).	The "View or Edit Details" ECU option is used to change user-selectable settings or to change the resources allocated for these functions (IRQs, DMA channels, I/O ports, and so on). This step is not required when using the board's default settings.
Save your configuration and restart the system.	The "Save and Exit" ECU option saves your configuration information to the system's nonvolatile memory.
Return to the SRM console (Digital UNIX and OpenVMS systems only) and restart the system.	Refer to step 4 of Section 5.6.2 for operating-system-specific instructions.

5.6.4 Configuring ISA Options

ISA boards are configured manually, whereas EISA boards are configured through the ECU software. Table 5–8 summarizes the steps necessary to configure an EISA bus that contains both EISA and ISA options. Review Section 5.6.1. Then run the ECU as described in Section 5.6.2.

Table 5–8 Summary of Procedure for Configuring EISA Bus with ISA Options

Step	Explanation
Install or move EISA option. Do not install ISA boards.	Use the instructions provided with the EISA option. ISA boards are installed after the configuration process is complete.
Power up the system and run ECU.	If you have installed an EISA option, the ECU needs to locate the CFG file for that option. This file may reside on a configuration diskette packaged with the option or may be included on the system configuration diskette.
Add the ISA board to the configuration list.	Use the "Add or Remove Boards" ECU option to add the CFG file for the ISA option and to select an acceptable slot for the option. The CFG file for the option may reside on a configuration diskette packaged with the option or may be included on the system configuration diskette. If you cannot find the CFG file for the ISA option, select the generic CFG file for ISA options from the configuration diskette.
View or Edit Details (optional).	The "View or Edit Details" ECU option is used to change user-selectable settings or to change the resources allocated for these functions (IRQs, DMA channels, I/O ports, and so on). This step is not required when using the board's default settings.
Examine and set required switches to match the displayed settings.	The "Examine Required Switches" ECU option displays the correct switch and jumper settings that you must physically set for each ISA option. Although the ECU cannot detect or change the settings of ISA boards, it uses the information from the previous step to determine the correct switch settings for these options. Physically set the board's jumpers and switches to match the required settings.
Save your configuration.	The "Save and Exit" ECU option saves your configuration information to the system's nonvolatile memory.
Return to the SRM console (Digital UNIX and OpenVMS systems only) and turn off the system.	Refer to step 4 of Section 5.6.2 for information about returning to the console.
Install ISA board and turn on the system.	Use the instructions provided with the ISA option.

5.7 PCI Bus Options

PCI (Peripheral Component Interconnect) is an industry-standard expansion I/O bus that is the preferred bus for high-performance I/O options. Up to eight 32-bit PCI options can reside in the PCI portion of the card cage. A PCI board is shown in Figure 5–9.

Figure 5–9 PCI Board

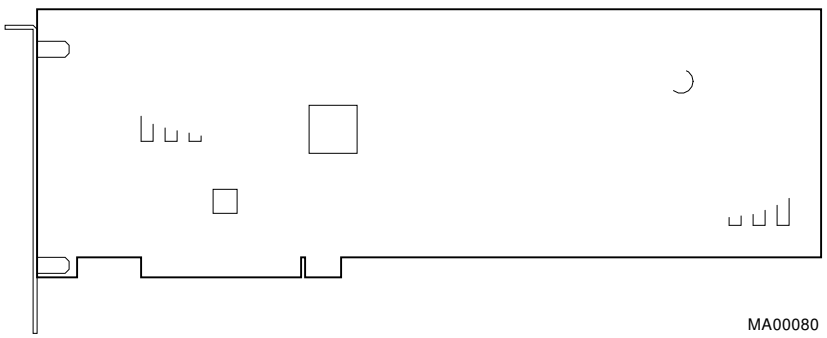

Install PCI boards according to the instructions supplied with the option. PCI boards require no additional configuration procedures; system automatically recognizes the boards and assigns the appropriate system resources.

Warning: For protection against fire, only modules with current-limited outputs should be used.

5.7.1 PCI-to-PCI Bridge

AlphaServer 2100A systems have a PCI-to-PCI bridge (DECchip 21050) on the system backplane.

- Physical PCI slots 4, 5, 6, and 7 (primary PCI) are located before the bridge.
- Physical PCI slots 0, 1, 2, and 3 (secondary PCI) are located behind the bridge.

PCI options that also contain a PCI-to-PCI bridge must be installed on the primary PCI bus, slots 4, 5, 6, or 7. Refer to the following documents for restrictions on specific PCI options:

- *AlphaServer 2100A Hardware Release Notes*—Shipped with the system.
- *AlphaServer 2100A Supported Options List*—The options list is available from the Internet at the following locations:

ftp://ftp.digital.com/pub/Digital/Alpha/systems/as2100a/docs/

http://www.service.digital.com/alpha/server/as2100a/docs.html

5.8 SCSI Buses

5.8.1 Onboard SCSI Bus, Pedestal (BA740-B9) Systems

An onboard, PCI-based controller on the system backplane provides 8-bit (narrow) Fast SCSI-2 support for removable-media devices:

- Up to three 5.25-inch, half-height devices

or

- One 5.25-in. full-height device and one 5.25-in. half-height device

This bus can only be extended to an internal StorageWorks shelf.

Figure 5–10 shows how to extend the removable-media bus into an internal StorageWorks shelf:

1. Remove the internal SCSI terminator from the SCSI cable.
2. Connect the SCSI cable to the StorageWorks backplane.
3. Connect the terminator and jumper on the internal StorageWorks shelf.

Note

When the bus is not extended into an internal StorageWorks shelf, the internal SCSI terminator is required.

Figure 5–10 Extending the Removable-Media Bus, Pedestal (BA740-B9) Systems

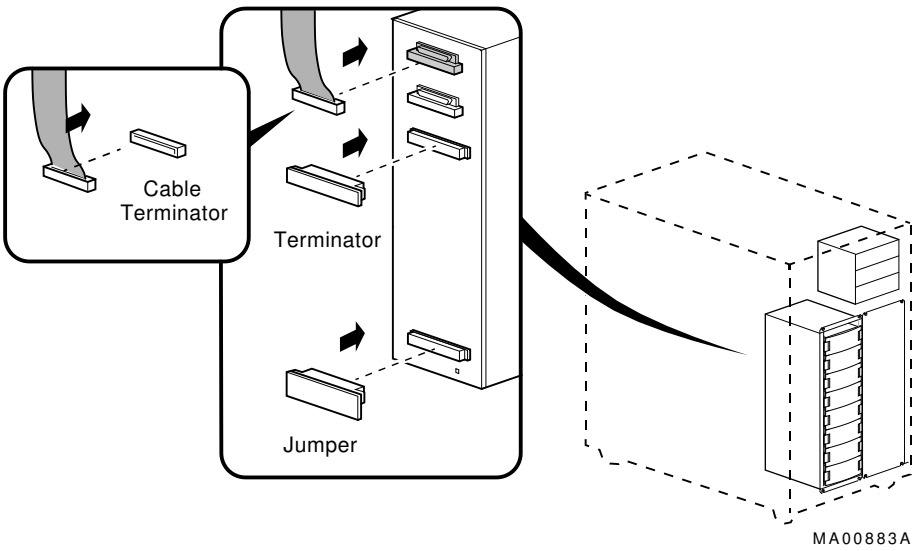

5.8.2 Internal StorageWorks Shelves, Pedestal (BA740-B9) Systems

Pedestal systems support up to two 16-bit (wide) internal StorageWorks shelves (option number BA35E-SA) that can each support up to eight SCSI disk drives in a dual-bus configuration.

The backplane of the internal StorageWorks shelf supplies the drive's SCSI node ID according to the location of the drive within the storage shelf. Each internal StorageWorks shelf can be configured in one of two ways:

- Single bus — Up to seven drives, each with a unique node ID. In this configuration, the bottom slot is not used.
- Dual bus — Up to four pair of drives (node IDs 0–3, top to bottom).

For pedestal enclosures, the storage shelf configuration is controlled by the position of the terminator (BA35X-ME) and jumper (BA35X-MF) as shown in Figure 5–11.

Figure 5–11 Internal StorageWorks Configuration (BA740-B9)

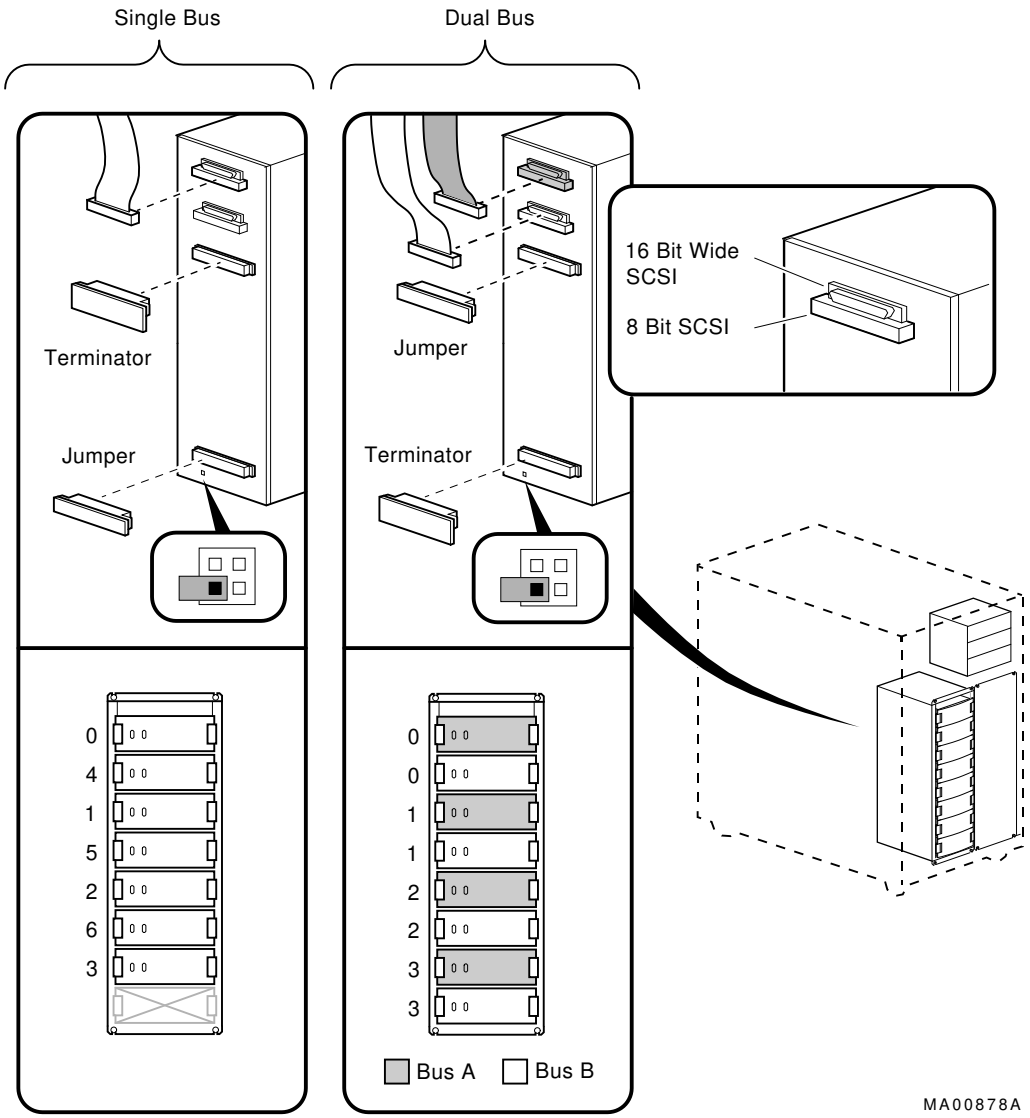

Alternative SCSI configurations for AlphaServer 2100A systems are shown in Figure 5–12. The pedestal system does not support 16 devices on a single bus internal to the enclosure. Check controller and operating systems support for 16 devices external to the pedestal enclosure.

- In the single bus configuration, the node ID jumper is on any 2 pins (enabled), and the SCSI node IDs are numbered 8–14.
- In the dual bus configuration, the node ID jumper is on any 2 pins (enabled), and the SCSI node IDs are numbered 8–11, top to bottom, for both buses.

Figure 5–12 Alternative StorageWorks Bus Configuration (BA740-B9)

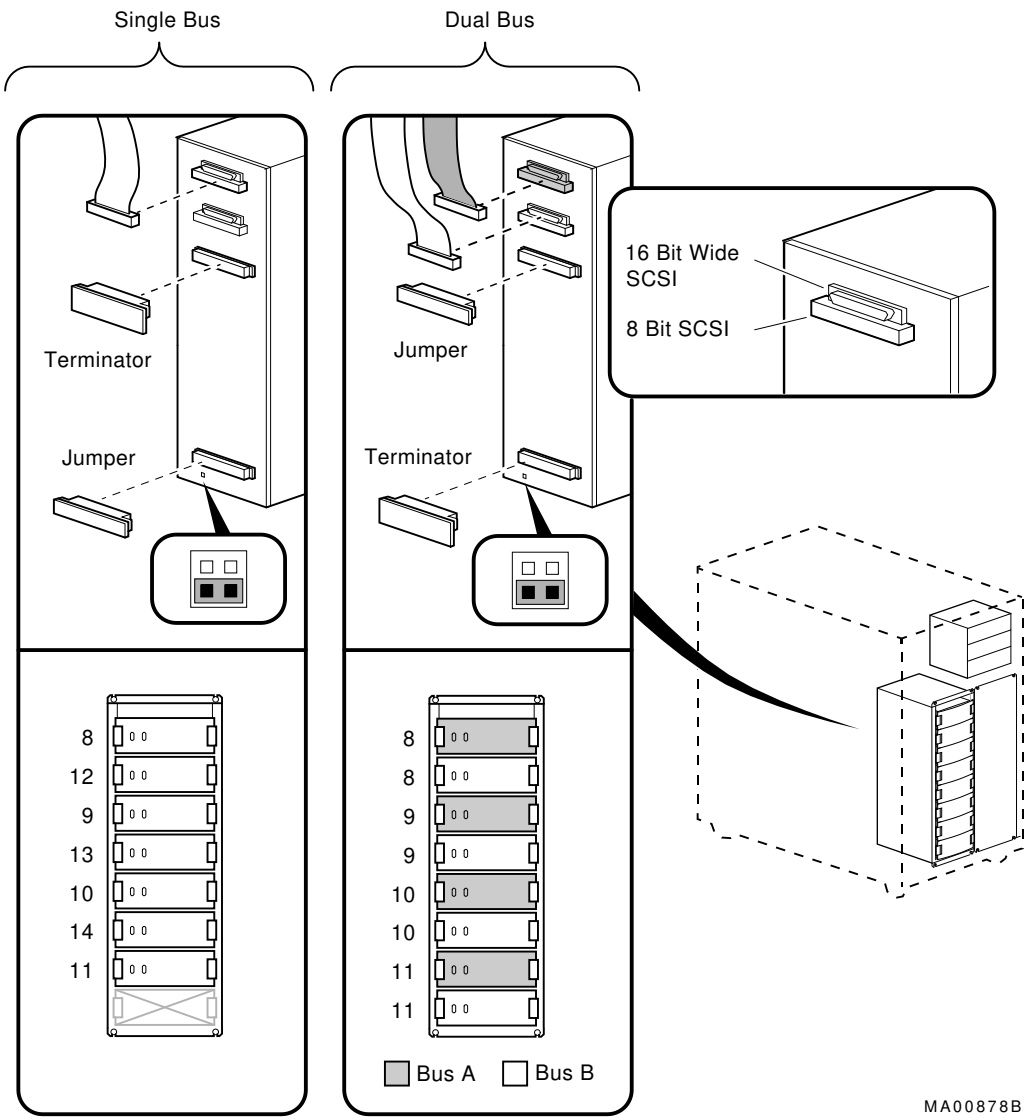

Figure 5–13 shows how to route the SCSI cables from a SCSI controller to a second internal StorageWorks shelf.

Figure 5–13 SCSI Cable Routing for Second Internal StorageWorks Shelf (BA740-B9)

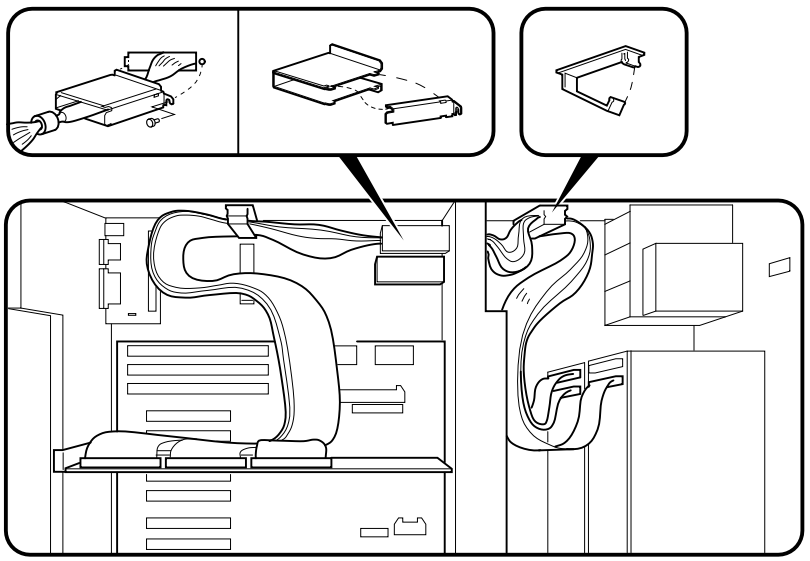

In planning a SCSI configuration, note the following:

- Narrow SCSI (8-bit) devices can be used in the wide StorageWorks shelf, as long as the devices are at a supported revision level. The narrow devices will run in narrow mode.
- Narrow and wide devices can be mixed in the wide StorageWorks shelf. In a mixed configuration, wide devices run in wide mode and narrow devices run in narrow mode.
- For best performance, wide devices should be operated in wide SCSI-2 mode.

Supported devices and configuration rules for wide SCSI-2 are described in the *Wide SCSI Technical Bulletin.* This bulletin is frequently updated and can be downloaded from the Internet:

http://www.service.digital.com/alpha/server/as2100a/docs/

5.8.3 Onboard SCSI Bus, Rackmount (BA744-A9) Systems

An onboard, PCI-based controller on the PCI/EISA backplane provides 8-bit (narrow) Fast SCSI-2 support for the internal SCSI drives:

One or two hard disk drives and up to two 5.25-inch, half-height removable devices

5.8.4 External SCSI Expansion

External SCSI devices, such as tabletop or rackmounted storage devices, can be connected to the system using EISA- or PCI-based SCSI adapters. Use the following rules to determine if a particular device can be used:

- The device must be supported by the operating system. Consult the *AlphaServer 2100A Supported Options List* on the Internet or contact the hardware vendor.

  ftp://ftp.digital.com/pub/Digital/Alpha/systems/as2100a/docs/

  http://www.service.digital.com/alpha/server/as2100a/docs.html

- A maximum of seven devices can be attached on any one SCSI-2 controller.
- Each device on the bus must have a unique SCSI ID. You may need to change a device's default SCSI ID in order to make it unique. All removable-media device bus node IDs are set by switches or jumpers on the device. For information about setting a device's ID, refer to the guide for that device.
- The entire SCSI bus length, from end-to-end, must not exceed 3 meters for Fast SCSI-2 at 10 MB/sec (6 meters at 5 MB/sec).
- Ensure that the SCSI bus is properly terminated on each end and that no devices in the middle of the bus are terminated.

5.8.5 Installing Removable Media Devices, Pedestal (BA740-B9) Systems

Figure 5–14 shows how to install 5.25-inch, half-height or full-height devices in the removable-media compartment for BA740-B9 pedestal enclosures.

Use the screws (4 flat-head screws per drive) that are provided with the system. The screws are in a plastic bag taped to the unused storage bracket.

Be sure that you set the device's node ID so that there are no duplicates, as each device must have a unique node ID. Nodes 0–6 are available for drives, and node 7 is reserved for the host adapter. For information on device switch settings, refer to the documentation supplied with the device.

Figure 5–14 Installing Removable Media, Pedestal (BA740-B9) Systems

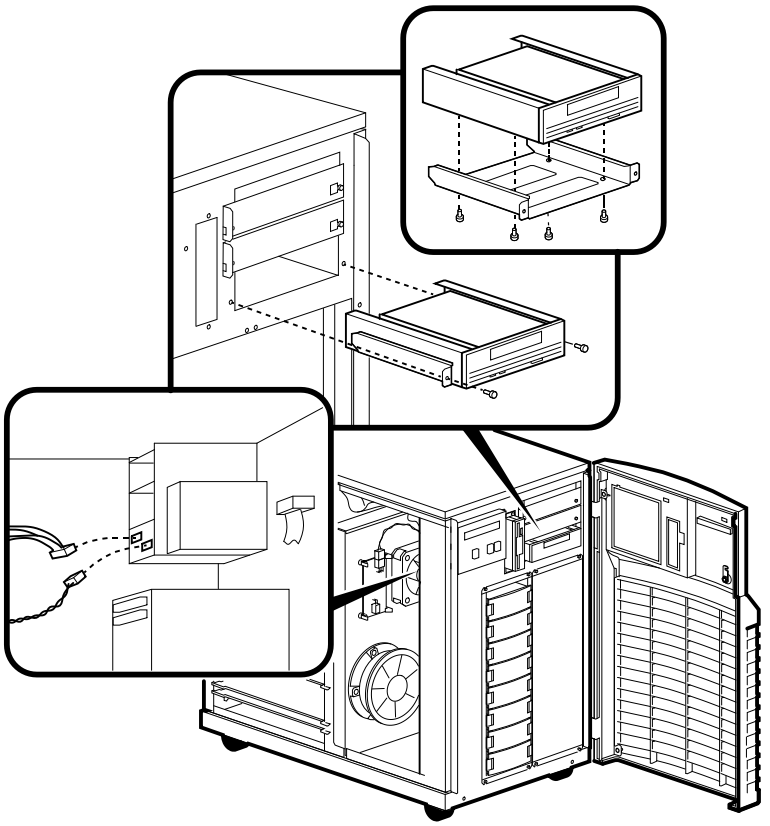

5.8.6 Installing StorageWorks Fixed-Disks, Pedestal (BA740-B9)

Swapping Drives

If the StorageWorks drives are connected to a StorageWorks Array 200 Subsystem Controller, you can ‘‘hot swap’’ drives, that is, you can install or replace drives without first shutting down the operating system or powering down the system. The RAID subsystem includes either the KZESC-*xx* (SWXCR-E*x*) EISA or KZPSC-*xx* (SWXCR-P*x*) PCI backplane RAID controller.

For information on hot swapping drives, see *StorageWorks RAID Array 200 Subsystems Controller Installation and Standalone Configuration Utility User's Guide,* EK-SWRA2-IG, provided with the StorageWorks RAID Array 200 Software kit.

If the StorageWorks drives are not plugged into the RAID subsystem, shut down the operating system before swapping a drive. However, you do not need to power down the server before installing the drive.

Installing Drives

Figure 5–15 shows how to install hard-disk drives in a StorageWorks shelf:

1. If the StorageWorks drives are plugged into the RAID subsystem, go to step 2.

   If your drives are not plugged into the RAID subsystem, shut down the operating system before you go to step 2.

2. Remove a blank bezel by pressing the two mounting tabs and pull the bezel out of the shelf.

3. Insert the hard-disk drive into the guide slots and push it in until the tabs lock in place.

Figure 5–15 Installing Hard-Disk Drives, Pedestal (BA740-B9)

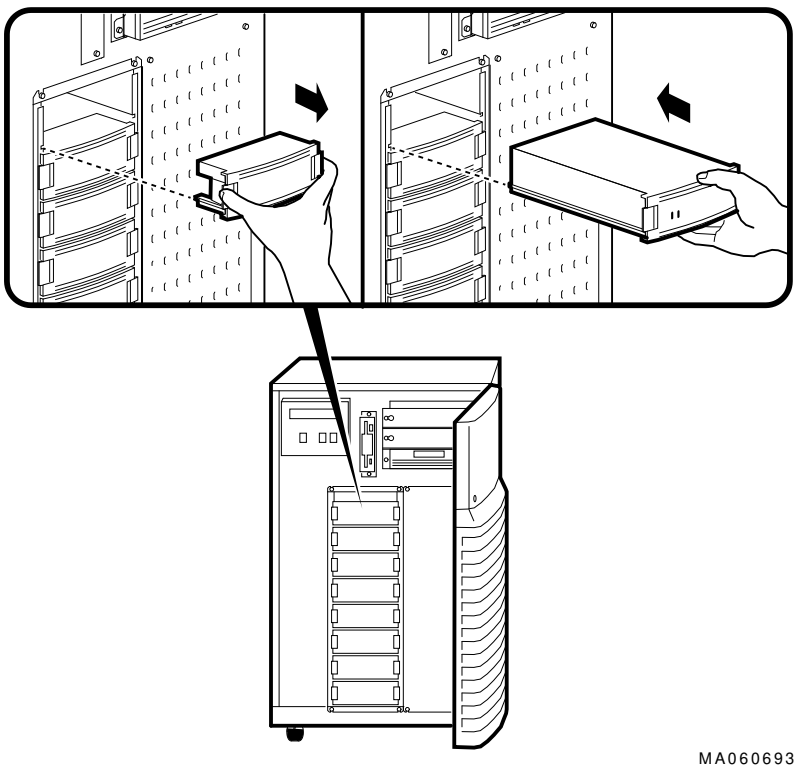

MA060693

5.8.7 Installing Removable Media Devices, Rackmount (BA744-A9) Systems

Figure 5–16 shows how to install 5.25-in. half-height devices in the removable-media compartment. Use the screws (M3 x 6 mm, flathead) supplied in the accessories kit to mount the drives.

Be sure that you set the device's node ID so that there are no duplicate node IDs, as each device must have a unique node ID. Nodes 0–6 are available for drives, and node 7 is reserved for the host adapter.

For information on device switch settings, refer to the documentation supplied with the device.

Note

RRDnn and TLZ0n drives use the set of bracket holes marked ''A'' in Figure 5–16.

The TZK11 drive uses the set of bracket holes marked ‘‘B’’ in Figure 5–16.

Figure 5–16 Installing Removable Media, Rackmount (BA744-A9)

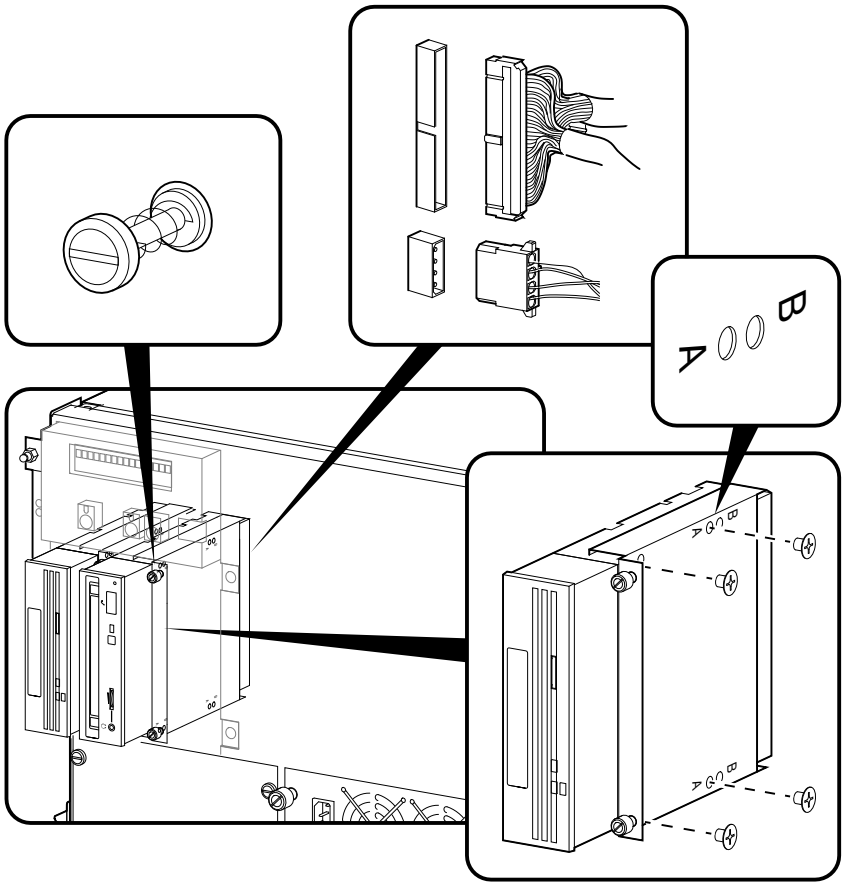

MLO-012326

5.8.8 Installing Fixed-Disks, Rackmount (BA744-A9) Systems

To install a hard-disk drive:

1. Mount four rubber grommets provided in the accessories kit to the drive.
2. Install drive as shown in Figure 5–17.

Be sure that you set the device's node ID so that there are no duplicate node IDs, as each device must have a unique node ID. Nodes 0–6 are available for drives, and node 7 is reserved for the host adapter. For information on device switch settings, refer to the documentation supplied with the device.

Figure 5–17 Installing a Hard-Disk Drive, Rackmount (BA744-A9)

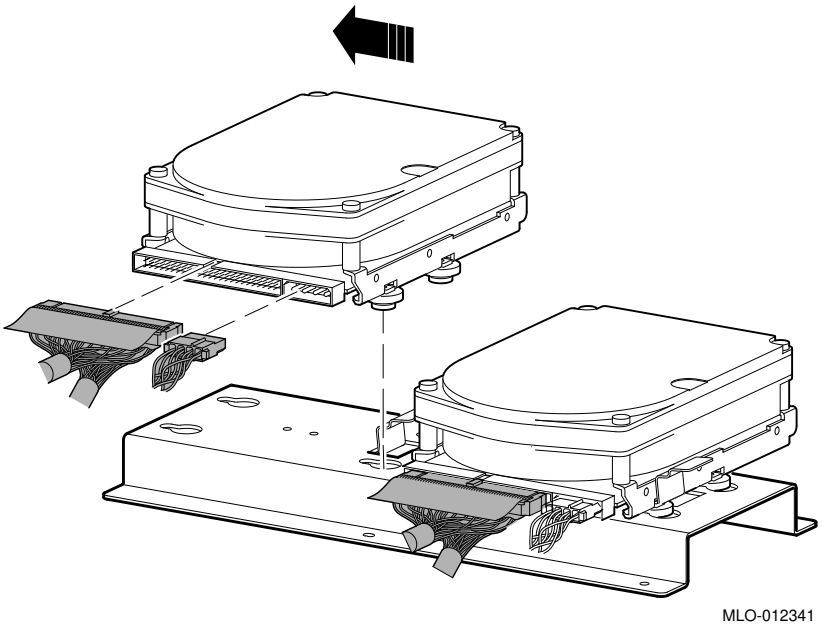

5.9 Power Supply Configurations

AlphaServer systems offer added reliability with redundant power options, as well as UPS options.

5.9.1 Power Supplies: Pedestal (BA740-B9) Systems

The power supplies for model pedestal systems support three different modes of operation. In addition, UPS options are available. Refer to Figure 5–18.

Power supply modes of operation:

1. **Single power supply**—Supports entry-level systems, such as a system with:

   Two CPUs
   One memory module
   One floppy drive and one CD–ROM drive
   One internal StorageWorks shelf with eight 3.5-in drives
   Up to eight PCI/EISA options

2. **Dual Power Supply (redundant mode)**—Provides redundant power (n + 1) for entry-level systems and moderately configured systems, such as the system configuration listed above.

   In redundant mode, the failure of one power supply does not cause the system to shut down. Normal operation continues with no impact on the system.

   The redundant power jumper (W1) on the system backplane must be installed to activate redundant mode power (Figure 5–19).

3. **Dual Power Supply (full power mode)**—Provides full power for more heavily configured systems, such as systems with more than two CPUs or more than one internal StorageWorks shelf. These systems require the power of two power supplies.

Consider the following guidelines for power consumption to determine if you need to upgrade the power supply configuration when ordering and installing additional options.

The single and redundant mode power supply configurations are available to those systems drawing:

- 602 watts DC output power or less
- 39 A or less of 3.3 V power
- 62 A or less of 5.1 V power
- 12.5 A or less of +12 V power
- 1.0 A of -12 V power

Figure 5–18 Pedestal (BA740-B9) Power Supply Configurations

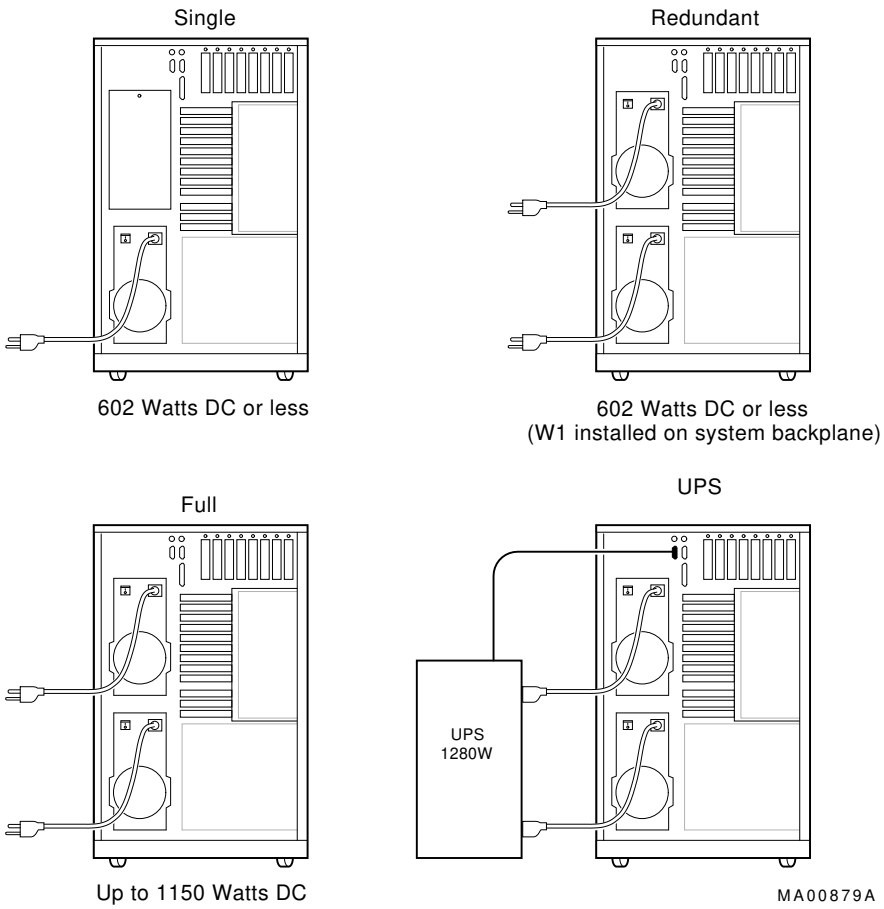

Figure 5–19 Pedestal (BA740-B9) W1 Redundant Power Jumper

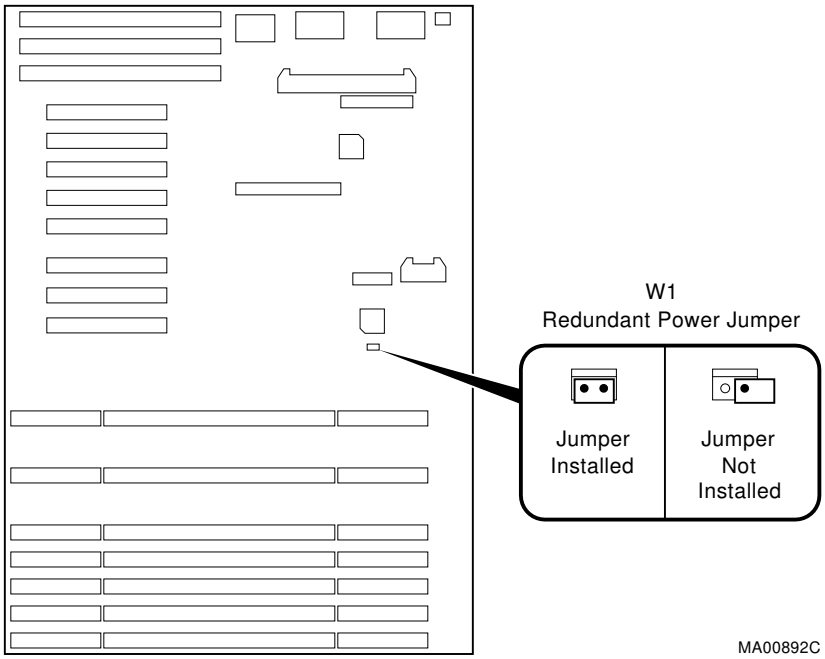

Redundant power (W1)	When installed, dual power supplies operate in redundant mode.

5.9.2 Power Supplies: Rackmount (BA744-A9) Systems

A second power supply can be added to rackmount systems to provide a redundant power supply. With a redundant power supply, in most cases the failure of one power supply does not cause the system to shut down. Normal operation continues with no impact on the system. Refer to Figure 5–20.

The redundant power jumper (W1) on the PCI/EISA backplane must be installed to activate redundant mode power (Figure 5–21).

Figure 5–20 Rackmount (BA744-A9) Power Supply Configurations

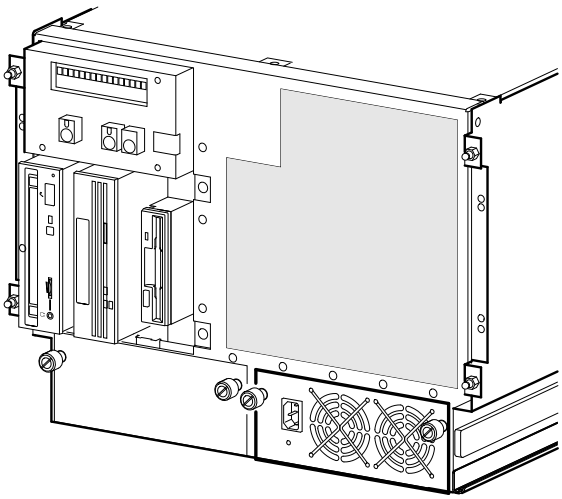

Single

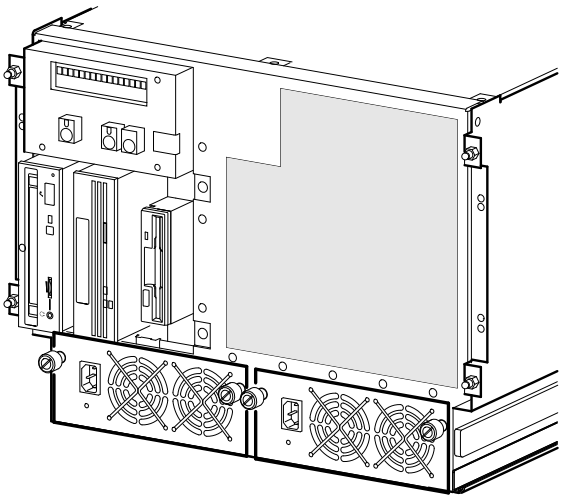

Redundant

MLO-012329

Figure 5–21 Rackmount (BA744-A9) W1 Redundant Power Jumper

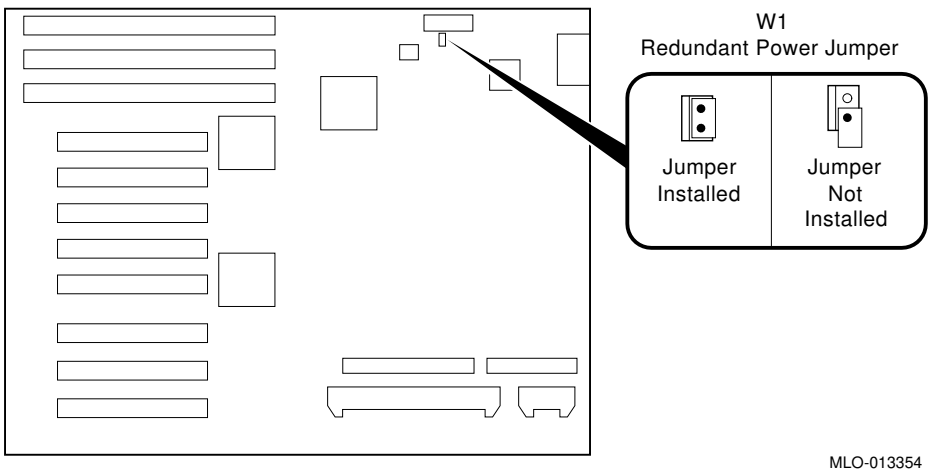

Redundant power (W1)	When installed, dual power supplies operate in redundant mode.

5.10 Console Port Configurations

Power-up information is typically displayed on the system's console terminal. The console terminal may be either a graphics monitor or a serial terminal (connected through the COM1 serial port).

There are several SRM console environment variables related with configuring the console ports:

Environment Variable	Description
console	Determines where the system will display power-up output. Set this environment variable according to the console terminal that you are using (Section 5.10.1).
tt_allow_login	Enables or disables login to the SRM console firmware on alternative console ports (Section 5.10.2).
com1_baud and com2_ baud	Changes the baud rate of the COM1 or COM2 port (Section 5.10.3).

In addition, the tga_sync_green environment variable (Section 5.10.4) is used to synchronize monitors using the high-performance turbo graphics adapter card (PBXGA).

A serial terminal can also be configured to run the ECU (Section 5.10.5).

5.10.1 set console

The setting of the console environment variable determines where the system will display power-up output. Power-up information is typically displayed on the console terminal. The console terminal can be either a graphics monitor or a serial terminal. Set this environment variable according to the console terminal that you are using.

Whenever you change the value of this environment variable, you must initialize the firmware with the `init` command.

Synopsis:

set console output_device

Arguments:

graphics — Sets the power-up output to be displayed at a graphics monitor or a device that is connected to the VGA module at the rear of the system (default setting).

serial	Sets the power-up output to be displayed on the device that is connected to the COM1 port at the rear of the system.

Example:

```
P00>>> set console serial
P00>>> init
.
.
.  !Now switch to the serial terminal.
P00>>> show console
console       serial
```

5.10.2 set tt_allow_login

The setting of the tt_allow_login environment variable enables or disables login to the SRM console firmware on alternative console ports.

Synopsis:

set tt_allow_login [0,1]

Arguments:

1	Enables login on alternative console ports (default setting). If the console output device is set to ''serial,'' allows you to log in on the primary COM1 port, or alternate COM2 port, or the graphics monitor. If the console output device is set to ''graphics,'' allows you to log in through either the primary graphics monitor or the alternate COM1 or COM2 console port.
0	Disables login on alternative console ports.

Example:

Whenever you change the value of this envrionment variable, you must initialize the firmware with the `init` command.

```
P00>>> set console serial
P00>>> set tt_allow_login 1
P00>>> init
```

5.10.3 set com1_baud or com2_baud

The com1_baud and com2_baud environment variable allows you to change the baud rate for the COM1 and COM2 serial ports.

Synopsis:

set com1_baud *[baud_value]*

set com2_baud *[baud_value]*

Baud Rate Values:

The baud rate values are 300, 600, 1200, 2400, 4800, 9600, and 19200.

Note

If you reset the baud rate, make sure the new setting is compatible with the baud rate setting for the terminal.

Example:

```
P00>>> set com1_baud 19200
```

5.10.4 set tga_sync_green

The tga_sync_green environment variable sets the location of the SYNC signal generated by the ZLXp-E PCI graphics accelerator card.

The correct setting, displayed with the `show` command, is:

```
P00>>> show tga_sync_green
tga_sync_green
```

If the monitor does not sychronize, set the parameter as follows:

```
P00>>> set tga_sync_green 00
```

Description:

This command sets all graphics cards to synchronize on a separate vertical SYNC line, as required by some monitors. See the monitor documentation for all other information.

5.10.5 Setting Up a Serial Terminal to Run ECU

You can run the ECU from either a VGA-compatible graphics monitor or from a serial terminal (VT200 or higher, or equivalent). Graphics is the default. To use a serial terminal with the ECU, do the following:

1. Invoke the terminal setup utility as described in the documentation for the serial terminal and change settings as follows:
   - From the General menu, set the terminal mode to VTxxx, 8-bit controls.
   - From the Comm menu, set the character format to 8 bit, no parity, and set receive XOFF to 128 or greater.

2. Enter the following commands a the SRM console prompt to set the console terminal to receive input in serial mode.

```
P00>>> set console serial
P00>>> init
.
.
.   !Now switch to the serial terminal
P00>>> show console
console serial
```

6

AlphaServer 2100A (BA740-B9 Enclosure) FRU Removal and Replacement

This chapter describes the field-replaceable unit (FRU) removal and replacement procedures for AlphaServer 2100A systems, which use the pedestal (BA740-B9) enclosure.

- Section 6.1 lists the FRUs for AlphaServer 2100A-series systems (BA740-B9 enclosure)
- Section 6.2 provides the removal and replacement procedures for the FRUs.

6.1 AlphaServer 2100A (BA740-B9 Enclosure) FRUs

Table 6–1 lists the FRUs by part number and description and provides the reference to the figure or section that shows the removal/replacement procedure.

Figures 6–1 and 6–2 show the locations of FRUs within the system. Figure 6–3 shows how to remove the door and panels.

Table 6–1 BA740-B9 Enclosure FRUs

Part #	Description	Section
Cables		
17-03870-01	Fan/removable media cable (12-pin)	Figure 6–4
17-04229-01	Floppy drive cable (34-pin)	Figure 6–5
17-03868-01	Internal StorageWorks power cable (5-pin)	Figure 6–6
17-03869-01	OCP module cable (10-pin)	Figure 6–7
17-00083-15	Power cord	Figure 6–8
17-02784-03	Remote I/O cable (60-pin)	Figure 6–9
17-04193-01	SCSI removable-media cable (50-pin)	Figure 6–10
17-04180-01	SCSI StorageWorks cable (68-pin)	Figure 6–11
CPU Modules		
B2020-AA	KN450 CPU module, 4/200	Section 6.2.2
B2020-BA	KN455 CPU module, 4/233	Section 6.2.2
B2024-AA	KN460 CPU module, 4/275	Section 6.2.2
B2040-AB	KN470 CPU module, 5/250	Section 6.2.2
B2040-BA	KN480 CPU module, 5/300	Section 6.2.2
Fans		
12-23609-09	4.5-inch fan	Section 6.2.3
12-36202-02	6.75-inch fan	Section 6.2.3
54-23260-01	Fan speed control board	Section 6.2.3
I/O Modules		
54-23151-01	Remote I/O module	Section 6.2.4

(continued on next page)

Table 6–1 (Cont.) BA740-B9 Enclosure FRUs

Part #	Description	Section
Internal StorageWorks		
RZnn -VW	StorageWorks disk drive	Section 6.2.5
54-23343-01	Internal StorageWorks backplane	Section 6.2.6
BA35X-ME (54-23376-01)	Internal StorageWorks terminator	Section 6.2.7
BA35X-MF (54-23378-01)	Internal StorageWorks jumper	Section 6.2.7
Memory Modules		
B2021-BA	MS450-BA 64MB, 80-ns memory module	Section 6.2.8
B2021-CA	MS450-CA 128MB, 80-ns memory module	Section 6.2.8
B2022-CA	MS451-CA 512MB, 80-ns memory module	Section 6.2.8
B2022-DA	MS451-DA 128MB, 80-ns memory module	Section 6.2.8
B2022-FA	MS451-FA 512MB, 80-ns memory module	Section 6.2.8
Other Modules and Components		
B2222-AA (54-24129-01)	System backplane	Section 6.2.9
54-23180-01	OCP module	Section 6.2.10
30-41274-01	Power supply	Section 6.2.11
12-39309-01	Speaker	Section 6.2.12
12-36437-03	Key for door	
12-34165-02	Serial Line Loopback	
17-04203-01	External SCSI Terminator	
12-36929-01	Internal SCSI Terminator	
12-36437-03	Key for door	

(continued on next page)

Table 6–1 (Cont.) BA740-B9 Enclosure FRUs

Part #	Description	Section
Removable Media		
RRDnn -CA	CD–ROM drives	Section 6.2.13
TLZnn -LG	Tape drives	Section 6.2.13
TZKnn -LG	Tape drives	Section 6.2.13
RXnn -AA	Floppy drive	Section 6.2.13

Figure 6–1 FRUs, Front Left

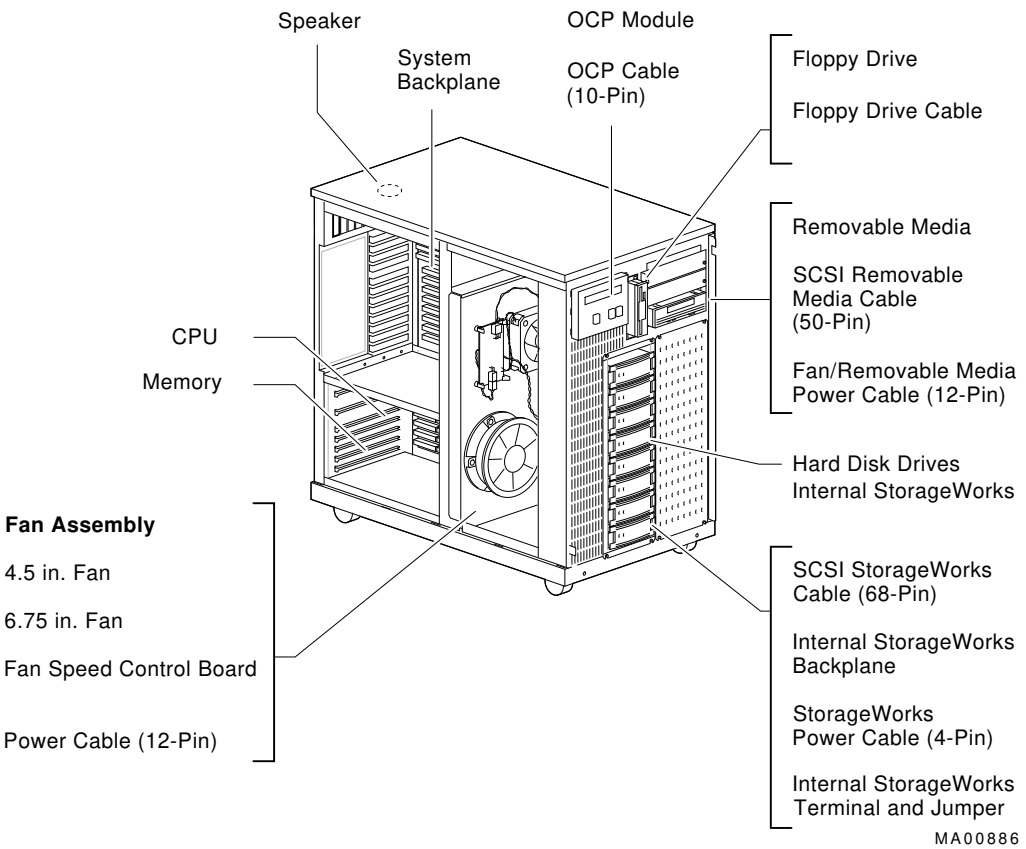

Figure 6–2 FRUs, Rear Right

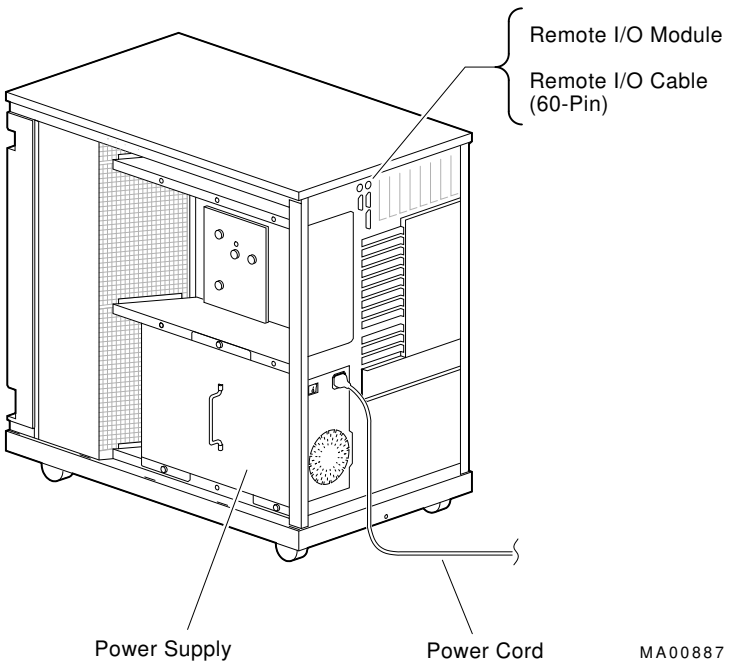

6.2 Removal and Replacement

This section describes the procedures for removing and replacing FRUs for AlphaServer 2100A-series systems, which use the BA740-B9 enclosure.

Caution: Before opening or removing panels:

1. Perform orderly shutdown of the operating system.
2. Set the DC power switch on the operator control panel to off.
3. Set AC On/Off switches to off.
4. Unplug AC power cords.

Caution

Static electricity can damage integrated circuits. Always use a grounded wrist strap (29-26246) and grounded work surface when working with internal parts of a computer system.

Unless otherwise specified, you can install an FRU by reversing the steps shown in the removal procedure.

Figure 6–3 Removing Door and Panels

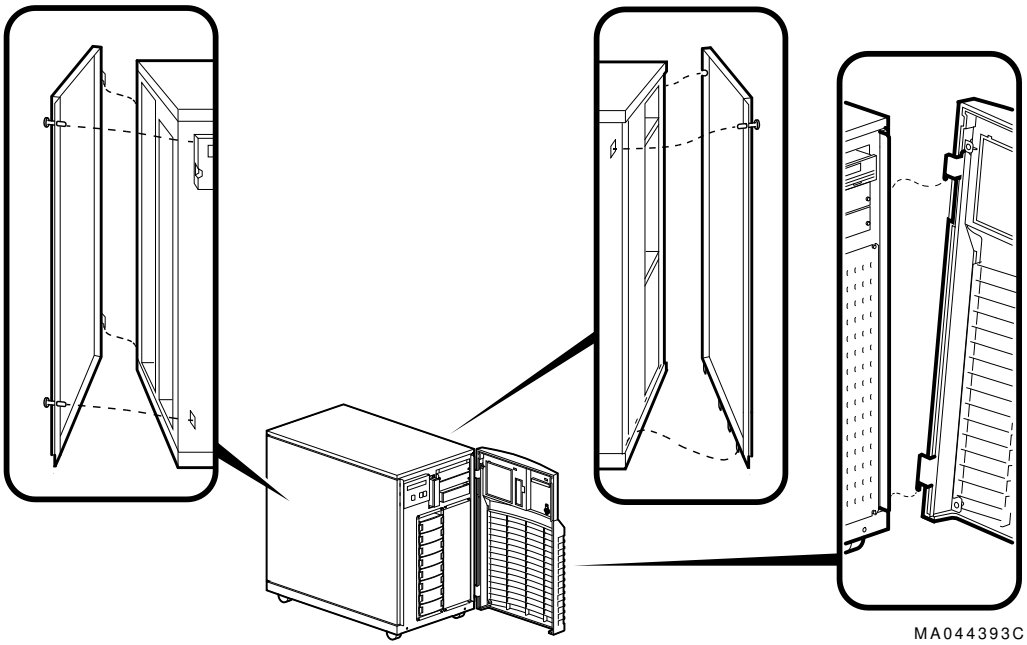

6.2.1 Cables

This section shows the routing for each cable in the system.

Figure 6–4 Fan/Removable Media Cable (12-Pin)

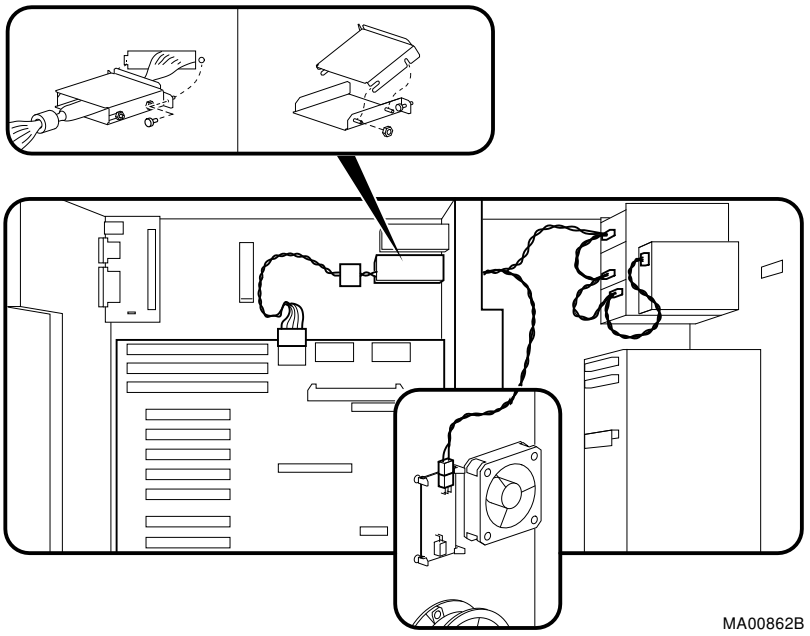

Figure 6–5 Floppy Drive Cable (34-Pin)

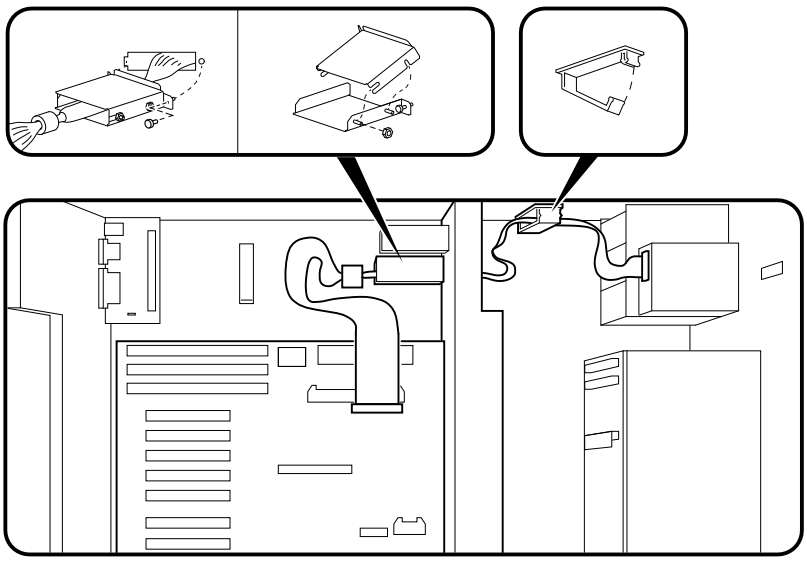

MA00860D

Figure 6–6 Internal StorageWorks Power Cable (5-Pin)

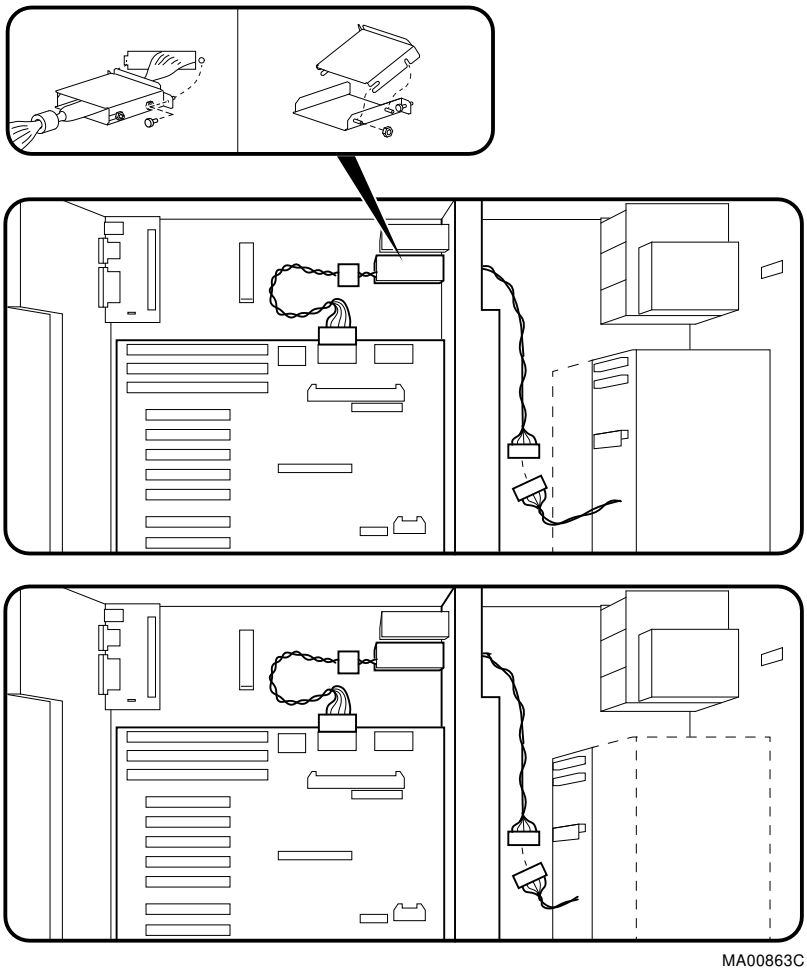

Figure 6–7 OCP Module Cable (10-Pin)

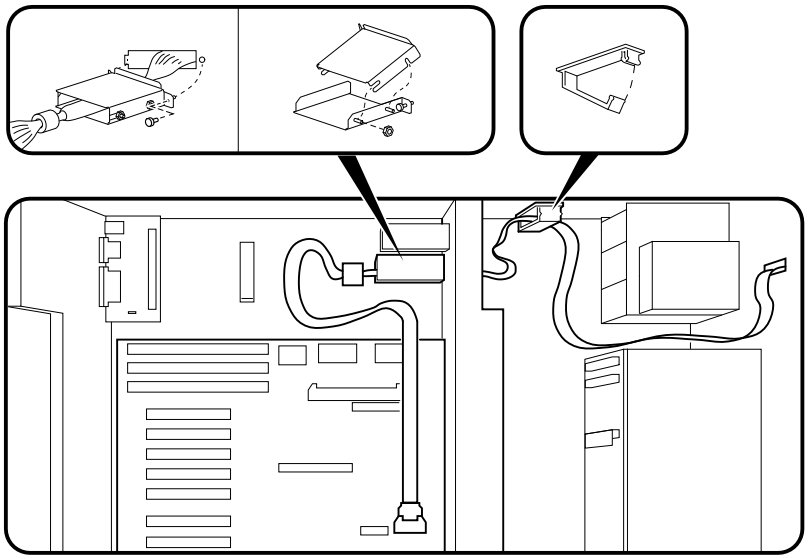

Figure 6–8 Power Cord

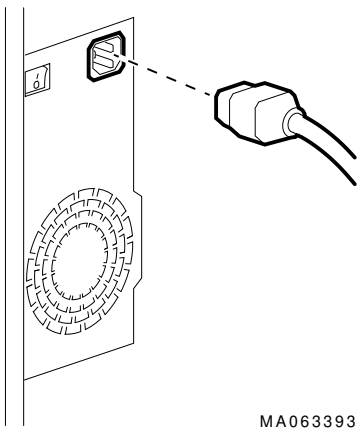

Table 6–2 lists the country-specific power cables.

Table 6–2 Power Cord Order Numbers

Country	Power Cord BN Number	Digital Number
U.S., Japan, Canada	BN27Y-1J	17-00083-15
Australia, New Zealand	BN19H-2E	17-00198-14
Central European (Aus, Bel, Fra, Ger, Fin, Hol, Nor, Swe, Por, Spa)	BN19C-2E	17-00199-21
U.K., Ireland	BN19A-2E	17000209-15
Switzerland	BN19E-2E	17-00210-13
Denmark	BN19K-2E	17-00310-08
Italy	BN19M-2E	17-00364-18
India, South Africa	BN19S-2E	17-00456-16
Israel	BN18L-2E	17-00457-16

Figure 6–9 Remote I/O Cable (60-Pin)

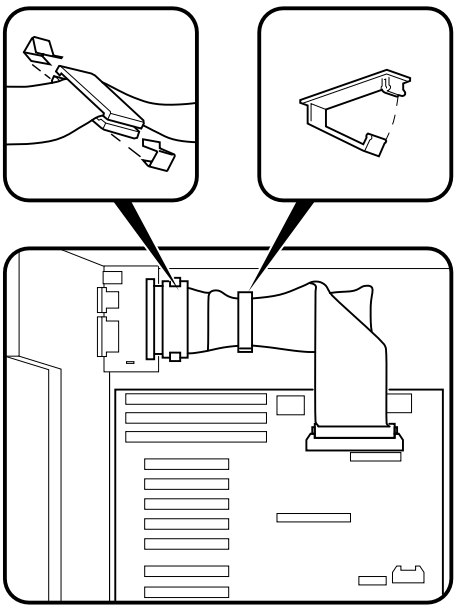

Figure 6–10 SCSI Removable-Media Cable (50-Pin)

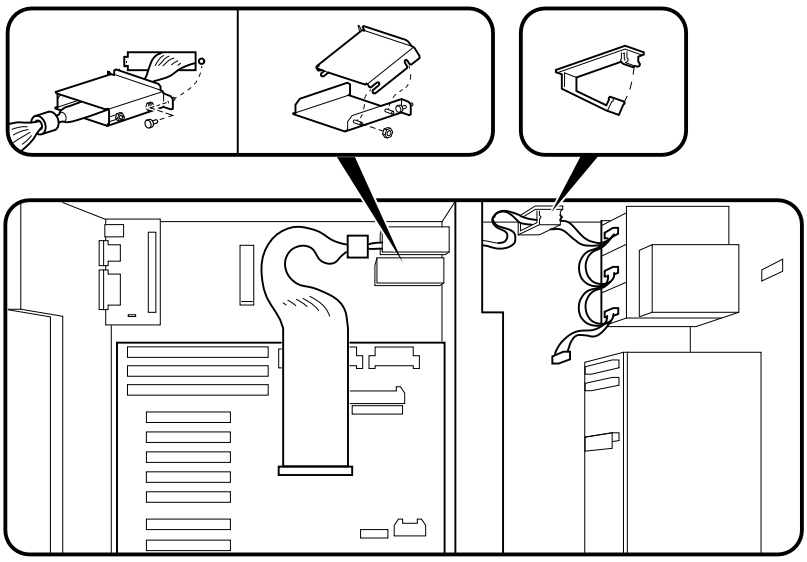

MA00876

Figure 6–11 SCSI StorageWorks Cable (68-Pin)

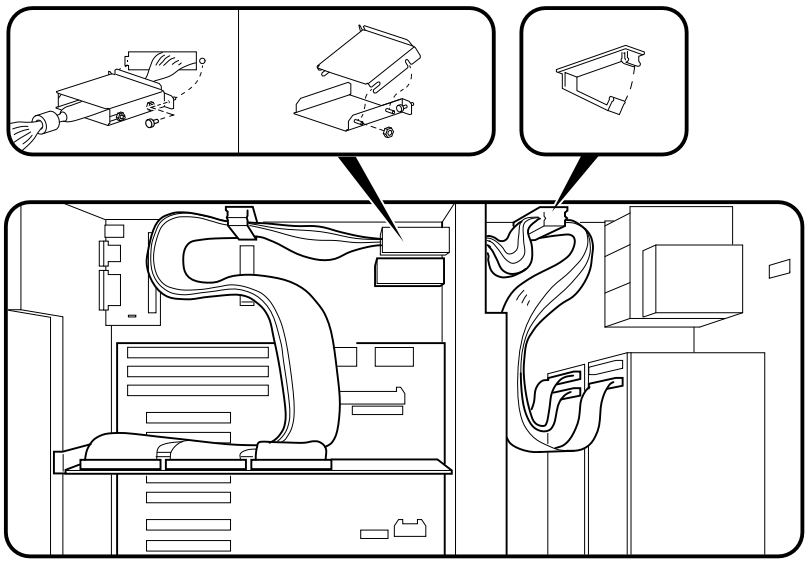

6.2.2 CPU Modules

Note

Different CPU types cannot be used within the same system. Example: A KN470 CPU module and a KN480 CPU module cannot be used in the same system.

Before replacing a CPU module, perform the following steps to verify which CPU is failing. After installing a new CPU, repeat this procedure to ensure that the new CPU configuration is working properly.

STEP 1: CHECK FOR ERRORS LOGGED TO THE CPU.

Verify that errors have been logged through the serial control bus before replacing a CPU module. Using the `show fru` and `show error` console commands, you can determine if errors are logged for a bad CPU.

If an event is logged for any other test than test number 00, the CPU should be replaced.

a. **Enter the** `show fru` **command to check for test-directed diagnostic (TDD) errors logged to the CPU.**

In the following example, a test-directed diagnostic (TDD) error is logged for CPU0.

```
P00>>> show fru

                                  Rev                    Events logged
 Slot   Option  Part#           Hw Sw   Serial#         SDD     TDD
   0    IO      B2222-AA        B2 0    NI53400096      00      00
   2    CPU0    B2020-AA        B2 10   KA426C0457      00      01
   3    CPU1    B2020-AA        B2 10   KA34509090      00      00
   4    MEM0    B2021-CA        A1 0    ML34398735      00      00
   7    MEM3    B2022-CA        A1 0    ML34100008      00      00
 .
 .
 .
P00>>>
```

b. **Enter the** `show error cpu0` **command to verify that an error, other than test number 00, is currently logged for that CPU.**

```
P00>>> show error cpu0

CPU0 Module EEROM Event Log

Test Directed Errors

Entry: 0  Test Number: 02       Subtest Number: 02
Parameter 1: 00000000,00000010
Parameter 2: ffffffff,ffffffff
Parameter 3: fffffeff,ffffffff

CPU Event Counters
C3_CA_NOACK     0
   .
   .
   .
C3_DT_PAR_E     0
C3_DT_PAR_O     0

B-Cache Correctable Errors

Entry   Syndrome        Offset L        Offset H        Count

No Entries Found
P00>>>
```

STEP 2: IF THE CPU HAS AN ERROR LOGGED, OTHER THAN FOR TEST NUMBER 00, PERFORM POWER SHUTDOWN AND REPLACE THE CPU MODULE.

An event logged for test number 00 does not indicate a bad CPU. Test number 00 indicates that a CPU failover occurred sometime in the past.

Note

All systems must have a CPU module installed in system bus slot 2 (CPU0).

All system bus slots must be populated with a printed circuit board (PCB) module or a clear plastic module to assure proper airflow over each PCB module.

Figure 6–12 Removing CPU Modules

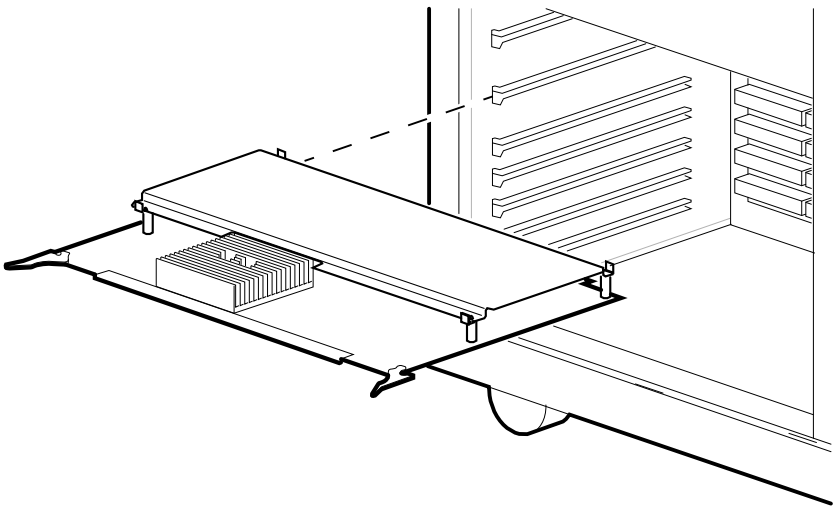

Warning: CPU and memory modules have parts that operate at high temperatures. Wait 2 minutes after power is removed before handling these modules.

STEP 3: VERIFY THAT ERRORS ARE NO LONGER LOGGED FOR THE CPU.

Use the `show fru` **command to verify that the errors are cleared.**

```
P00>>> show fru

                                 Rev                    Events logged
 Slot   Option  Part#           Hw Sw   Serial#         SDD     TDD
   0    IO      B2222-AA        B2 0    NI53400096      00      00
   2    CPU0    B2020-AA        B2 10   KA426C0457      00      00
   3    CPU1    B2020-AA        B2 10   KA34509090      00      00
   4    MEM0    B2021-CA        A1 0    ML34398735      00      00
   7    MEM3    B2022-CA        A1 0    ML34100008      00      00
 .
 .
 .
P00>>>
```

Note

To clear an event logged for test number 00 (CPU failover), use the `clear_error cpu#` command.

6.2.3 Fans and Fan Speed Control Board

STEP 1: REMOVE FAN ASSEMBLY.

Figure 6–13 Removing Fan Assembly

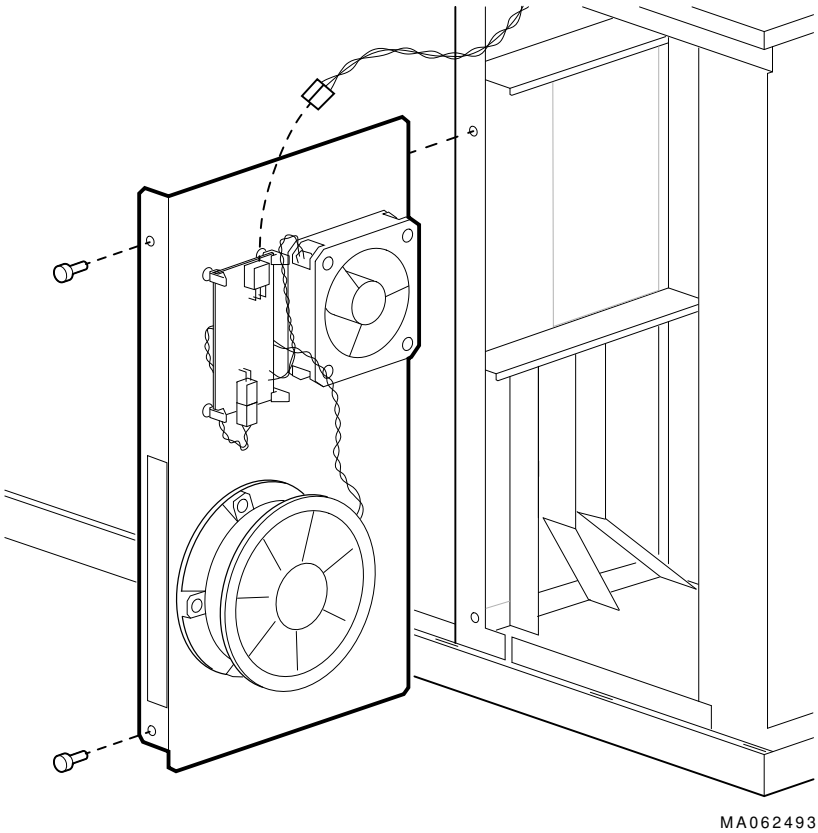

STEP 2: REMOVE FAN COMPONENT.

Figure 6–14 Removing Fan Component

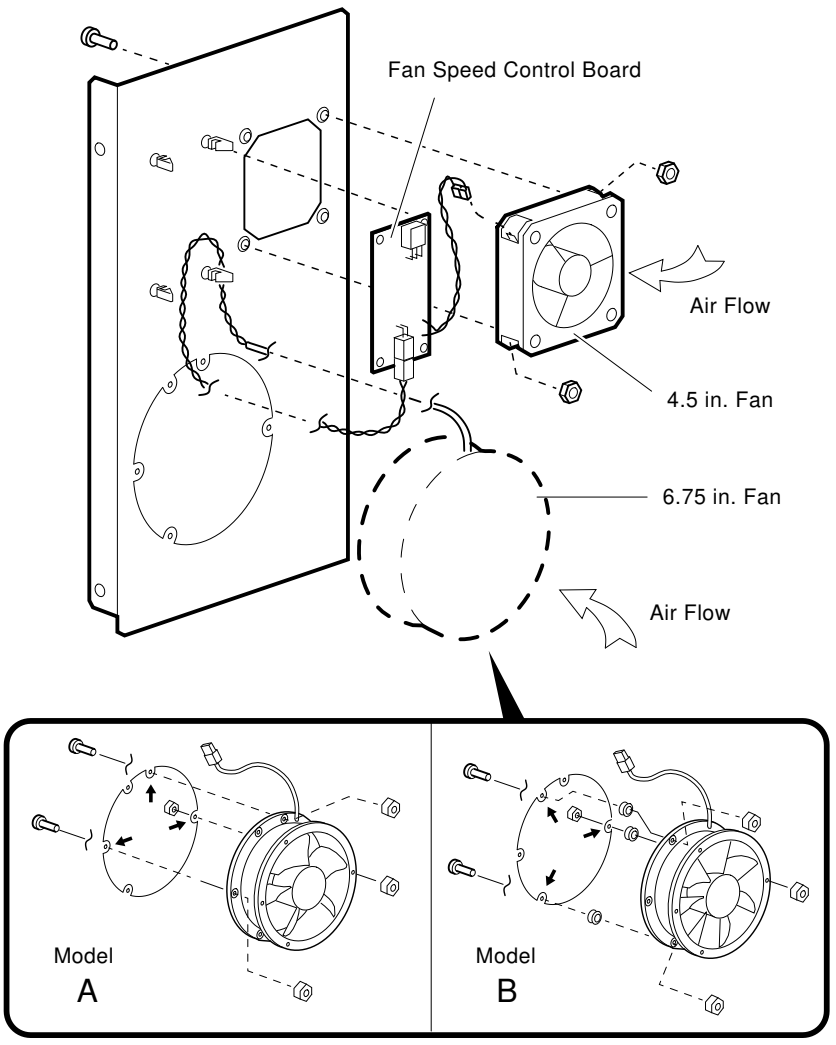

Caution

Two types of 6.75 inch fans are used with the BA740 enclosure. One type, shown as Model A in the illustration, manufactured by Sanyo Denki,

needs to be oriented with the ground boss to the top. If this fan is not in the proper orientation, system bus components may overheat.

6.2.4 Remote I/O Module

Figure 6–15 Removing the Remote I/O Panel

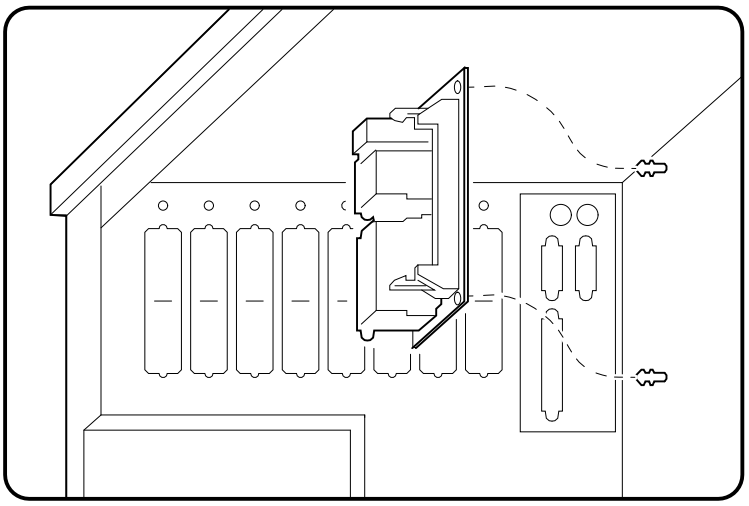

MA00889

6.2.5 StorageWorks Drive

Note

If the StorageWorks drives are plugged into a RAID controller, you can ‘‘hot swap’’ drives; that is, you can add or replace drives without first shutting down the operating system or powering down the server hardware. For more information, see *StorageWorks RAID Array 200 Subsystems Controller Installation and Standalone Configuration Utility User's Guide,* EK-SWRA2-IG.

If the StorageWorks drives are not plugged into a RAID controller, you will need to shut down the operating system before swapping a drive. However, you will not need to power down the server before installing the drives.

Figure 6–16 Removing StorageWorks Drive

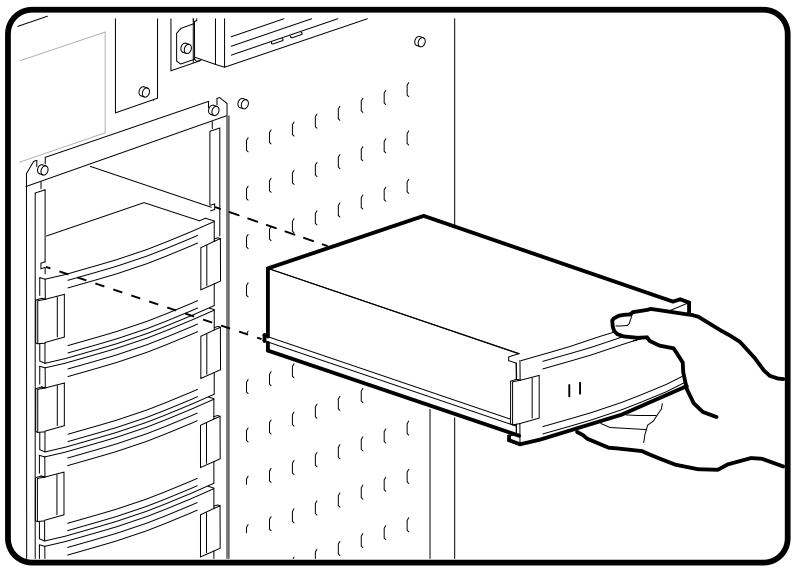

MA062693

6.2.6 Internal StorageWorks Backplane

STEP 1: REMOVE INTERNAL STORAGEWORKS SHELF.

Figure 6–17 Removing Internal StorageWorks Shelf

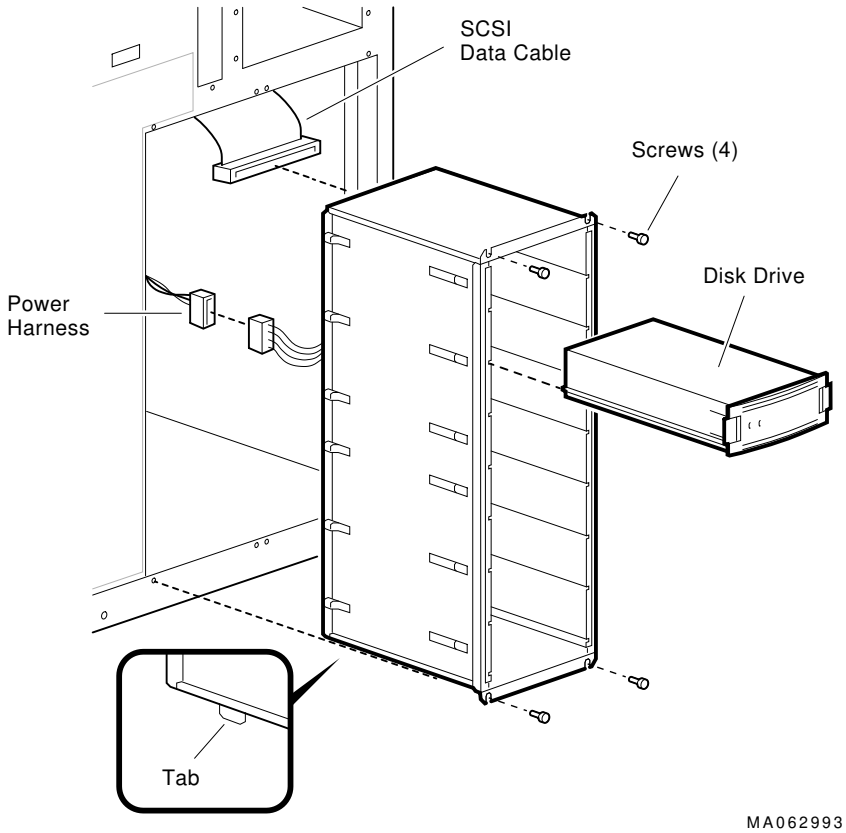

STEP 2: REMOVE INTERNAL STORAGEWORKS BACKPLANE.

Figure 6–18 Removing Internal StorageWorks Backplane

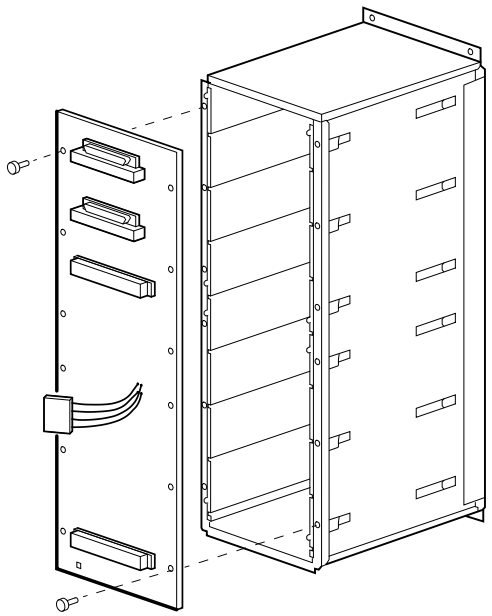

6.2.7 Internal StorageWorks Terminator and Jumper

Figure 6–19 Removing Internal StorageWorks Terminator and Jumper

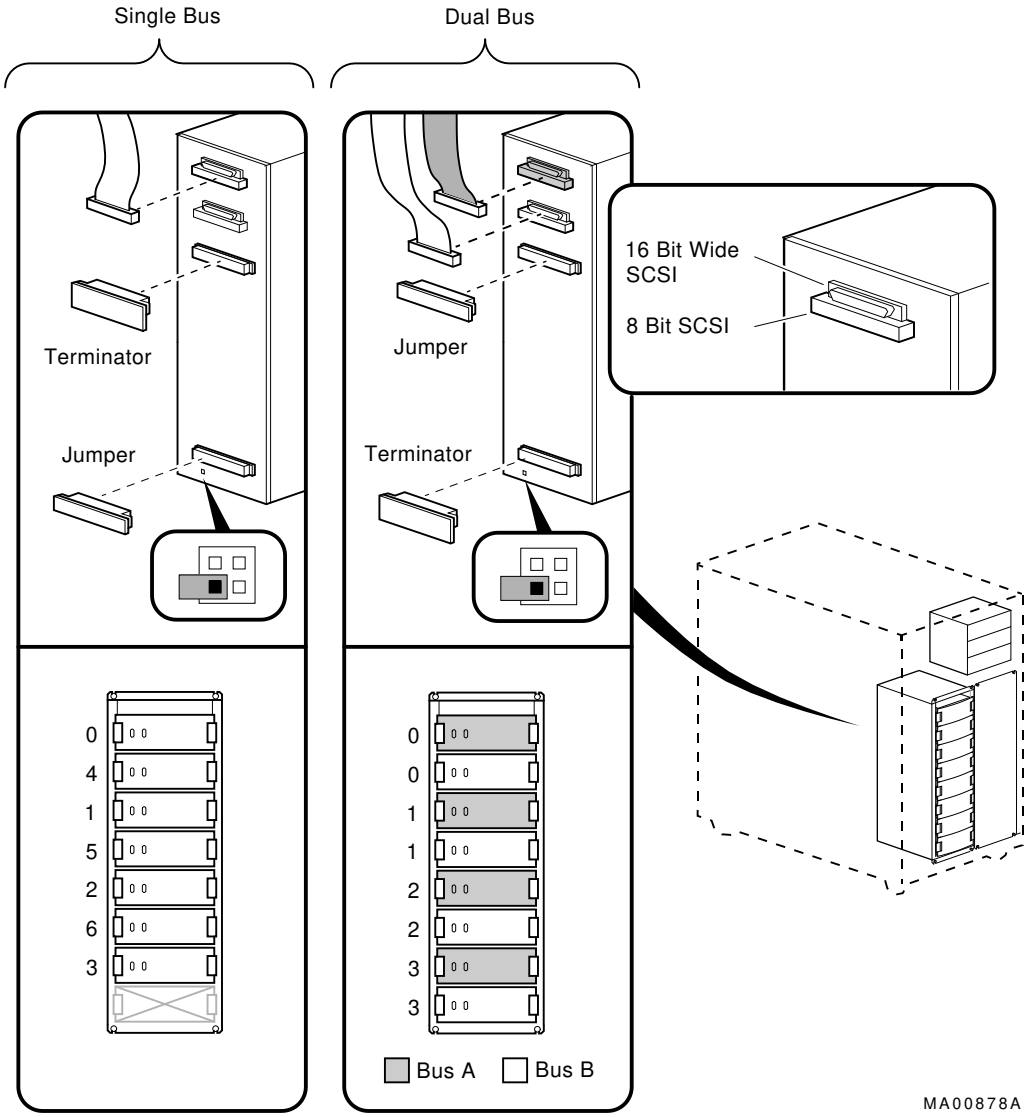

6.2.8 Memory Modules

Note

All system bus slots must be populated with a printed circuit board (PCB) module or a clear plastic module to assure proper airflow over each PCB module.

Figure 6–20 Removing Memory Modules

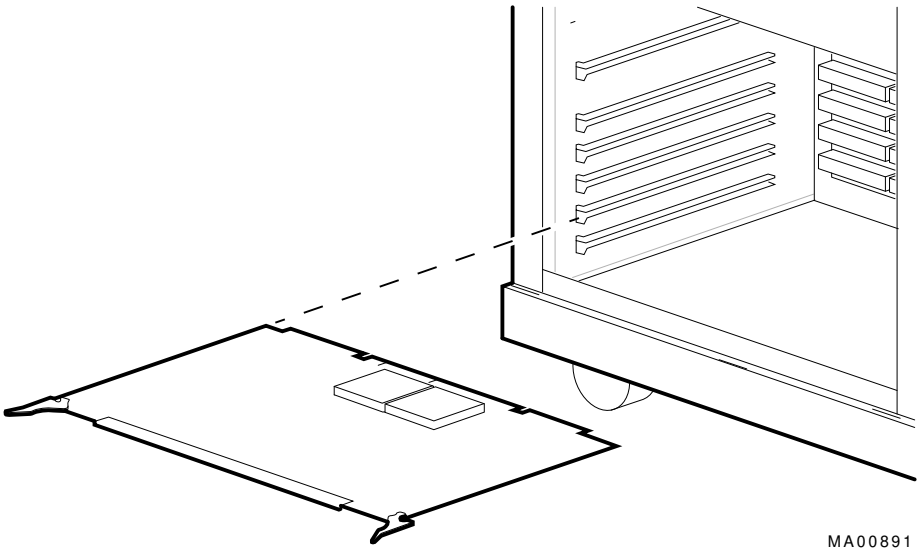

Warning: Memory and CPU modules have parts that operate at high temperatures. Wait 2 minutes after power is removed before handling these modules.

6.2.9 System Backplane

STEP 1: REMOVE MODULES AND DIVIDER.

Figure 6–21 Removing Modules and Divider

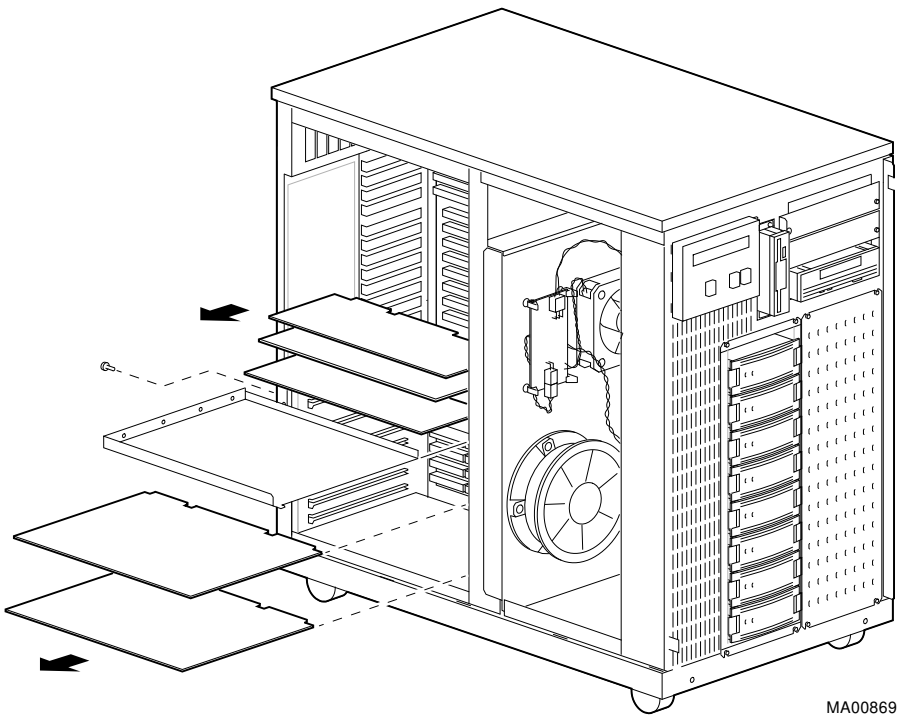

Warning: Memory and CPU modules have parts that operate at high temperatures. Wait 2 minutes after power is removed before handling these modules.

STEP 2: REMOVE POWER SUPPLIES.

Figure 6–22 Removing Power Supplies

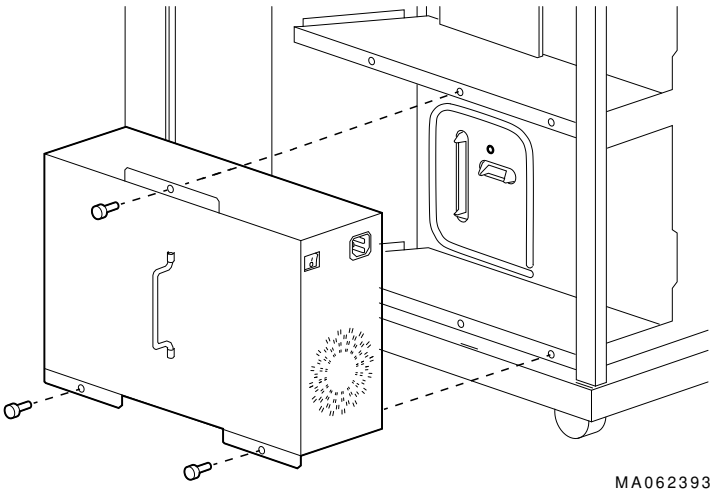

STEP 3: DETACH CABLES AND REMOVE BACKPLANE.

When replacing backplane, install screws in order indicated.

Figure 6–23 Removing Backplane

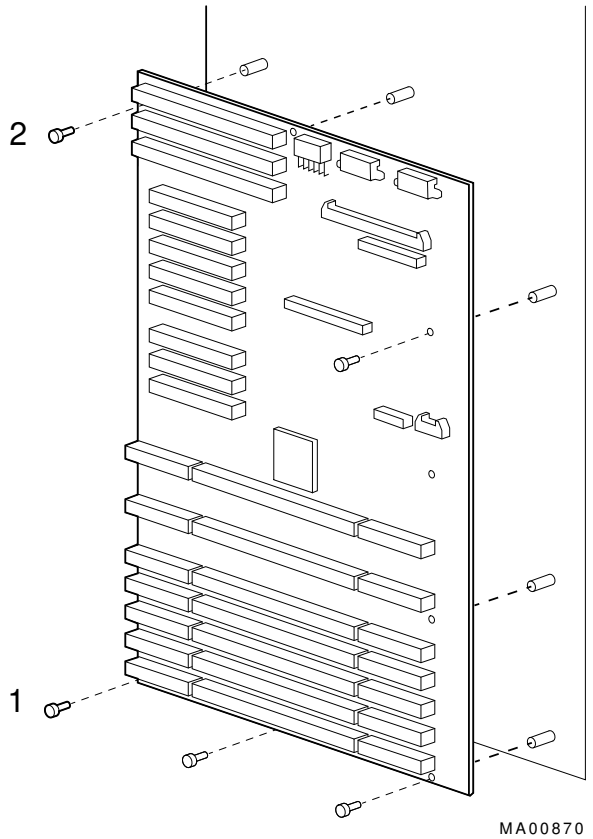

STEP 4: MOVE NVRAM CHIP TO NEW BACKPLANE AND SET THE REDUNDANT POWER SUPPLY JUMPER.

Move the socketed NVRAM chip (position E49) to the replacement backplane and set the redundant power supply jumper (W1) to match previous setting.

STEP 5: SET THE FSL ENABLE SWITCH TO OFF; AND SET THE FSL CONSOLE UPDATE SWITCH TO ON.

The replacement backplane ships with incomplete firmware. The backplane contains no ARC console or fail-safe loader firmware. After installing the backplane, you will need to update the firmware by invoking the Loadable Firmware Utility (LFU) from the CD–ROM, as described in Step 6.

Figure 6–24 System Backplane: Jumper, Switches, Connectors, and NVRAM Chip

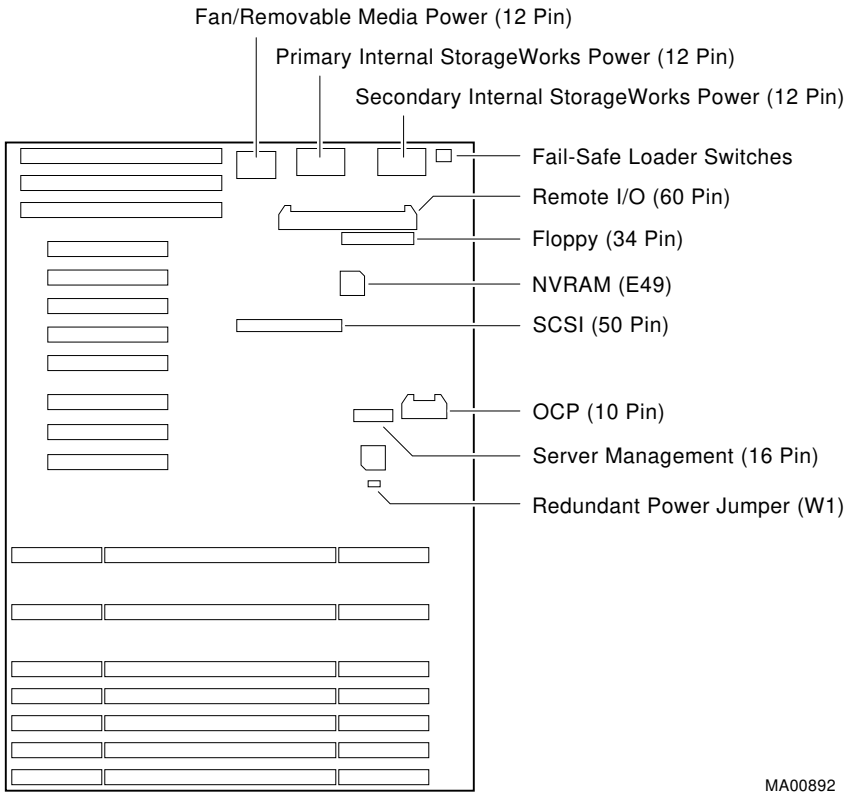

Figure 6–25 System Backplane FSL Switches and Redundant Power Jumper

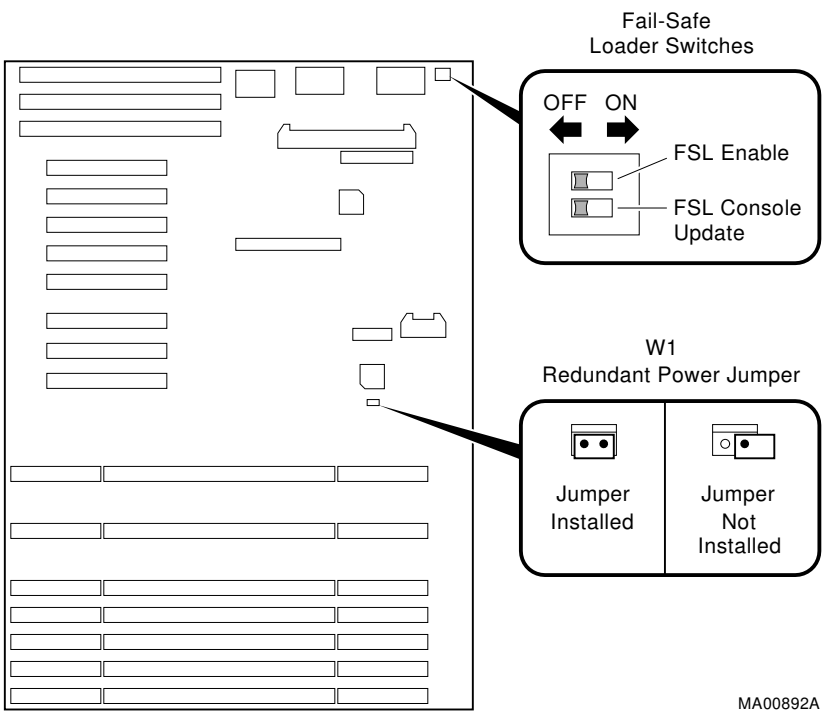

FSL Enable	Selects FSL console firmware when set to ON.
FSL Console Update	Allows writes to the fail-safe loader when set to ON. Used to update the fail-safe loader console firmware.
Redundant Power (W1)	When installed, dual power supplies operate in redundant mode.

STEP 6: AFTER INSTALLING THE SYSTEM BACKPLANE, UPDATE THE CONSOLE FIRMWARE.

Power up with the FSL console update switch set to ON. Invoke the LFU and update the firmware as described in the *Mandatory AlphaServer 2xxx Flash ROM Update*, EK-B2110-CL, shipped with the replacement backplane.

Note

After completing the update, remember to power down and set the FSL console update switch to OFF.

6.2.10 OCP Module

STEP 1: DETACH OCP CABLE AND REMOVE OCP COVER.

Figure 6–26 Removing OCP Cover

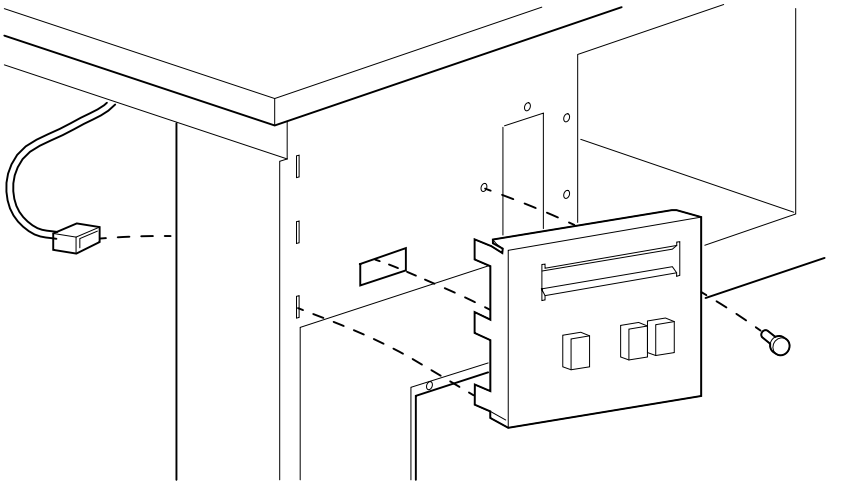

STEP 2: REMOVE OCP MODULE.

Figure 6–27 Removing OCP Module

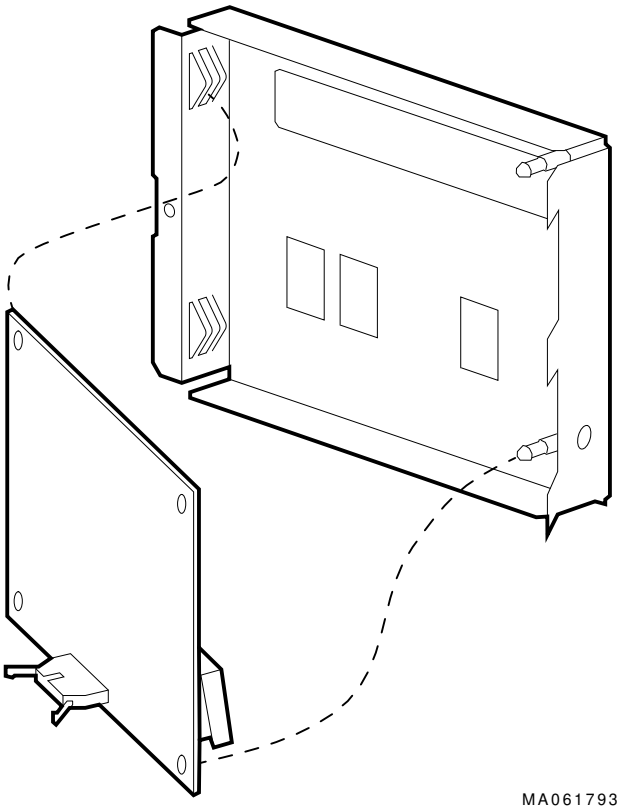

6.2.11 Power Supply

Figure 6–28 Removing Power Supply

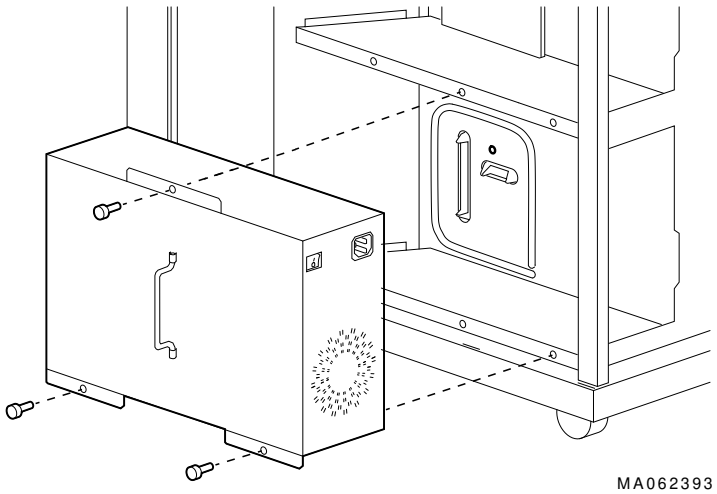

Warning: Hazardous voltages contained within. Do not service. Return to factory for service.

6.2.12 Speaker

Figure 6–29 Removing Speaker

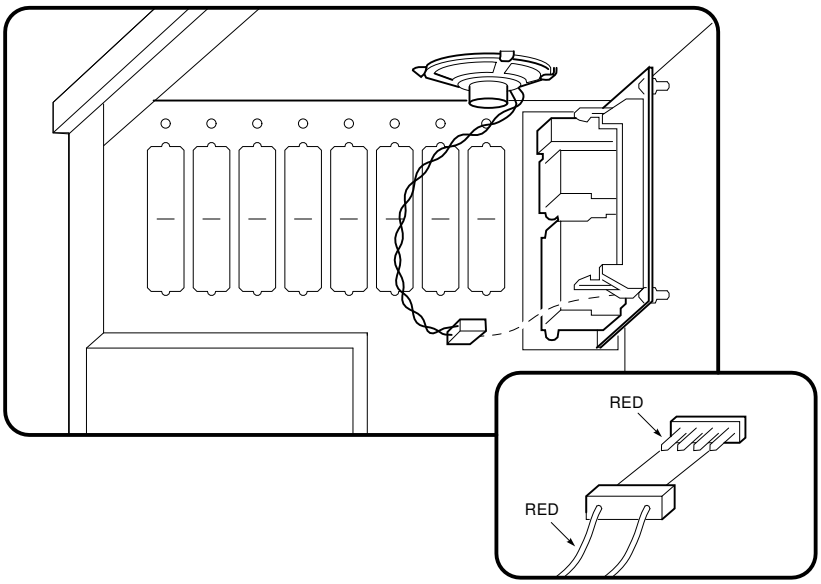

6.2.13 Removable Media

Figure 6–30 Removing a Removable-Media Drive

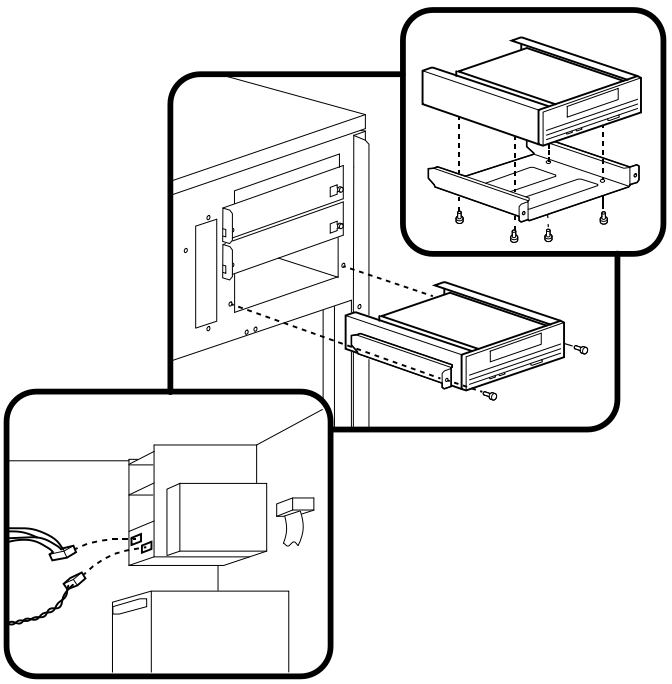

MA063293

Figure 6–31 Removing Floppy Drive

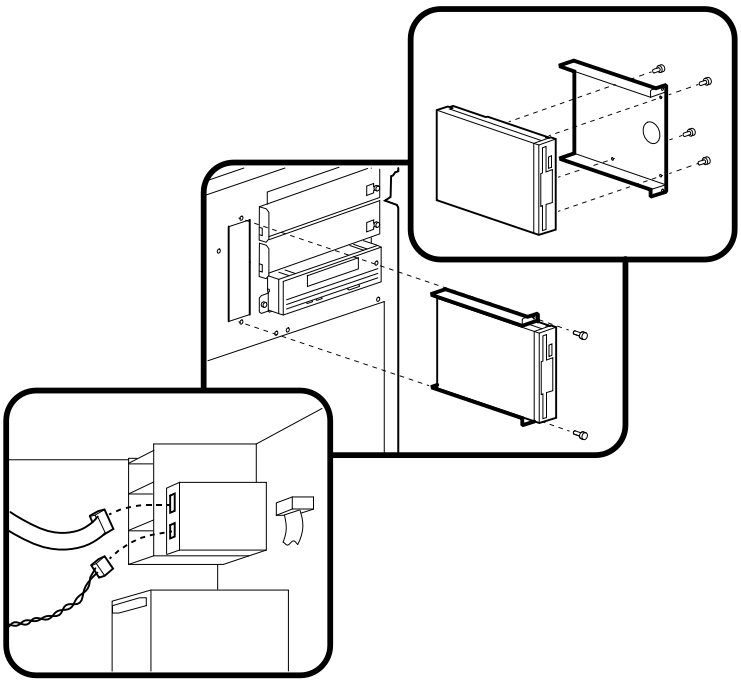

MA065193

7

AlphaServer 2100A RM/CAB (BA744-A9 Enclosure) FRU Removal and Replacement

This chapter describes the field-replaceable unit (FRU) removal and replacement procedures for AlphaServer 2100A RM and CAB systems, which use the rackmount (BA744-A9) enclosure.

- Section 7.1 lists the FRUs for AlphaServer 2100A RM and 2100 CAB systems (BA744-A9 enclosure)
- Section 7.2 provides the removal and replacement procedures for the FRUs.

7.1 AlphaServer 2100A RM/CAB (BA744-A9 Enclosure) FRUs

Table 7–1 lists the FRUs by part number and description and provides the reference to the figure or section that shows the removal/replacement procedure.

Figures 7–1 and 7–2 show the locations of FRUs within the system. Sections 7.2.1 through 7.2.2 show how to access rackmount FRUs.

Table 7–1 BA744-A9 Enclosure FRUs

Part #	Description	Section
Cables		
17-04085-01	Floppy drive cable (34-pin)	Figure 7–9
17-04013-01	Multinode fan/storage device cable (12-pin)	Figure 7–10
17-03971-01	OCP module cable (10-pin)	Figure 7–11
17-00083-51	Power cord 120V	Figure 7–12
17-00083-52	Power cord 240V (CAB systems)	Figure 7–12
17-04014-01	Power supply control cable assembly (24-pin to 15-pin)	Figure 7–13
17-04015-01	Power supply 12V cable assembly (16-pin to 8-pin)	Figure 7–14
17-02784-03	Remote I/O cable (60-pin)	Figure 7–15
17-04203-01	SCSI storage-media cable (50-pin)	Figure 7–16
CPU Modules		
B2020-AA	KN450 CPU module, 4/200	Section 7.2.4
B2020-BA	KN455 CPU module, 4/233	Section 7.2.4
B2024-AA	KN460 CPU module, 4/275	Section 7.2.4
B2040-AB	KN470 CPU module, 5/250	Section 7.2.4
B2040-BA	KN480 CPU module, 5/300	Section 7.2.4
Fans		
12-23374-02 or 12-36202-02	6.75-inch fans	Section 7.2.5
54-22615-01	Fan speed control board	Section 7.2.6
I/O Modules		
54-23151-01	Remote I/O module	Section 7.2.7

(continued on next page)

Table 7–1 (Cont.) BA744-A9 Enclosure FRUs

Part #	Description	Section
Memory Modules		
B2021-BA	MS450-BA 64MB, 80-ns memory module	Section 7.2.8
B2021-CA	MS450-CA 128MB, 80-ns memory module	Section 7.2.8
B2022-CA	MS451-CA 512MB, 80-ns memory module	Section 7.2.8
B2022-DA	MS451-DA 128MB, 80-ns memory module	Section 7.2.8
B2022-FA	MS451-FA 512MB, 80-ns memory module	Section 7.2.8
Other Modules and Components		
54-23180-03	OCP module	Section 7.2.9
30-41765-01	Power supply	Section 7.2.10
12-39309-03	Speaker	Section 7.2.11
54-24281-01	System bus backplane	Section 7.2.12
54-24283-01	PCI/EISA backplane	Section 7.2.12
90-11194-01	Key, 1/4-turn fastener	
12-34165-02	Serial line loopback (not included with system)	
Removable Media		
RRDnn -AA	CD–ROM drives	Section 7.2.14
TLZnn -LG	Tape drives	Section 7.2.14
TZKnn -LG	Tape drives	Section 7.2.14
RXnn -AA	Floppy drive	Section 7.2.14
Fixed Disk Drives		
RZnn -E	Disk drive	Section 7.2.13

Figure 7–1 FRUs, Upper Compartments

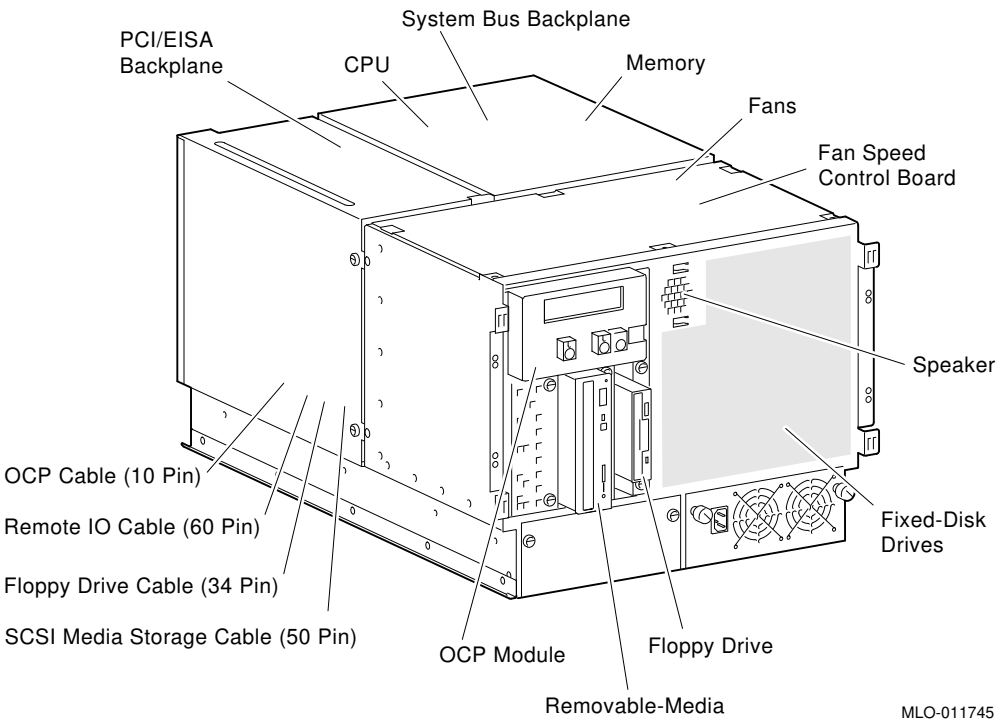

Figure 7–2 FRUs, Lower Compartment

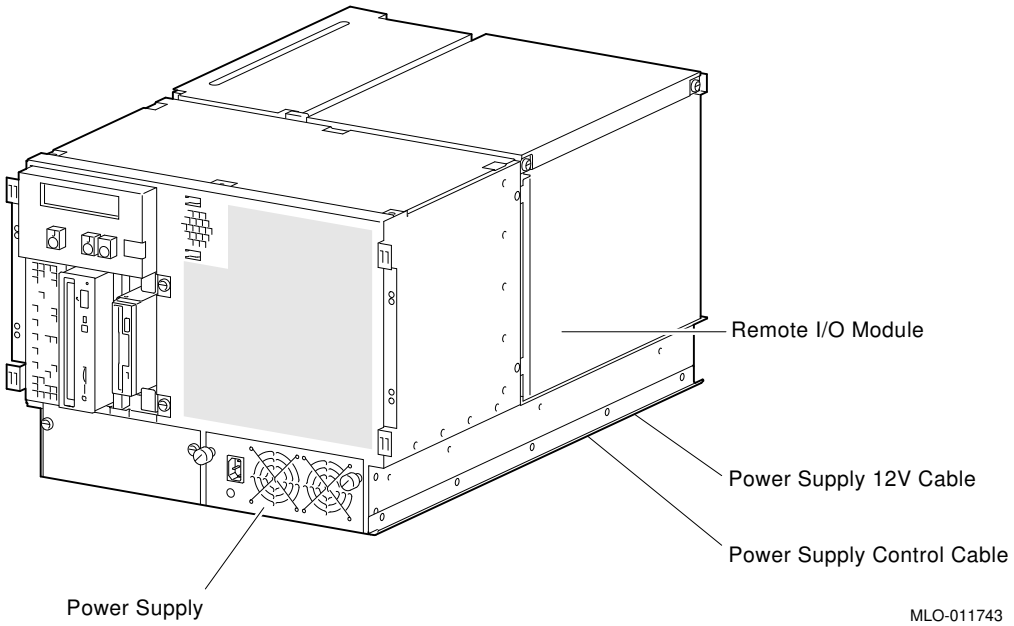

7.2 Removal and Replacement

This section describes the procedures for removing and replacing FRUs for AlphaServer 2100A RM and 2100A CAB systems, which use the BA744-A9 enclosure.

Warning: Before accessing enclosure compartments:

1. Perform orderly shutdown of the operating system.
2. Set the DC power switch on the operator control panel to off
3. Remove power by unplugging the AC power cord from each power supply.

Caution

Static electricity can damage integrated circuits. Always use a grounded wrist strap (29-26246) and grounded work surface when working with internal parts of a computer system.

Unless otherwise specified, you can install an FRU by reversing the steps shown in the removal procedure.

7.2.1 Sliding System Out

Warning

The system weighs 45.4 kg (100 lb). To prevent personal injury and equipment damage, ensure that only one system is extended out of the cabinet at any one time and that the cabinet is stabilized (as in Figure 7–3) before pulling the system out on its slides.

The adjustable leveling feet should be down and the cabinet's stabilizing bar fully extended before any component is extended out of the cabinet on slides.

Do not extend more than one slide assembly at a time, cabinet instability may result.

STEP 1: STABILIZE CABINET BEFORE SLIDING SYSTEM OUT.

Figure 7–3 Example of a Cabinet Stabilizer

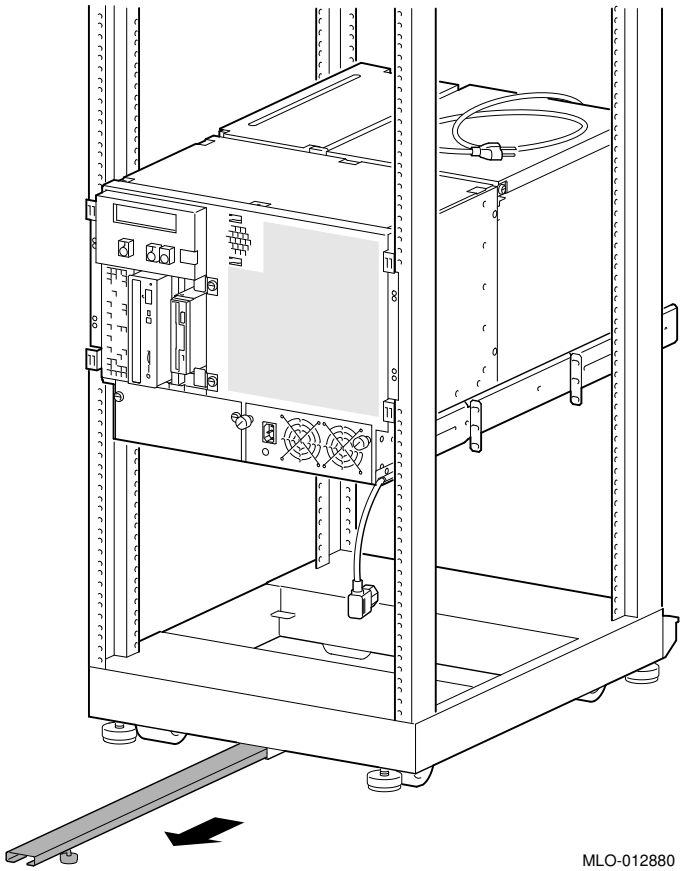

STEP 2: REMOVE FRONT PANEL.

Figure 7–4 Removing Front Panel

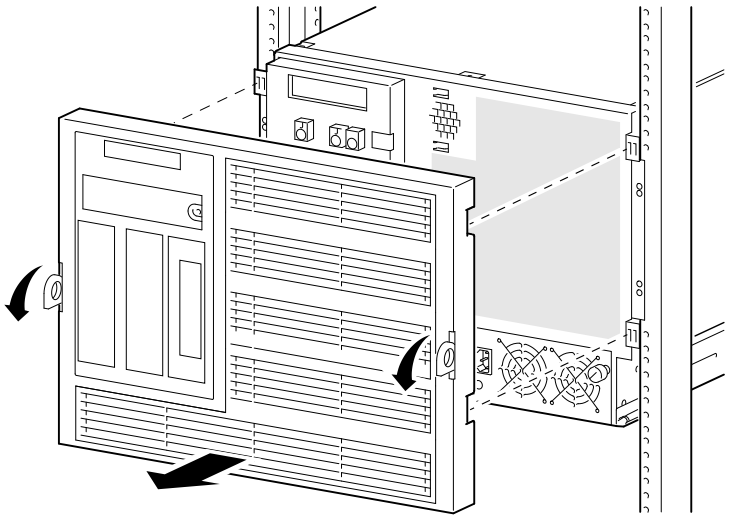

STEP 3: REMOVE SCREWS AND SLIDE SYSTEM OUT.

Figure 7–5 Sliding Out Rackmount System

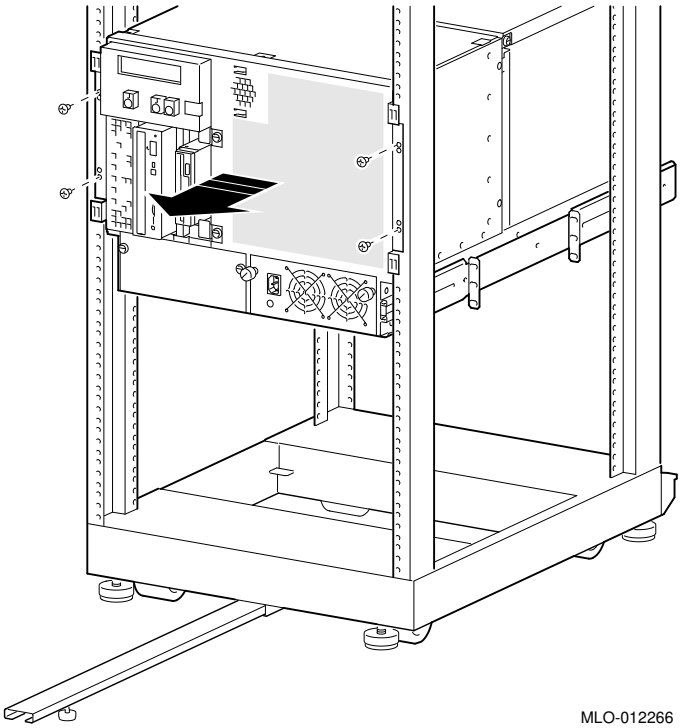

7.2.2 Accessing Enclosure Compartments

The following figures show how to open doors or remove panels to access compartments containing FRUs.

- Figure 7–6 shows how to remove the cover to access the mass storage compartment.
- Figure 7–7 shows how to open the door to access the PCI/EISA bus compartment.
- Figure 7–8 shows how to remove the cover to access the system bus compartment.

Figure 7–6 Accessing the Mass Storage Compartment

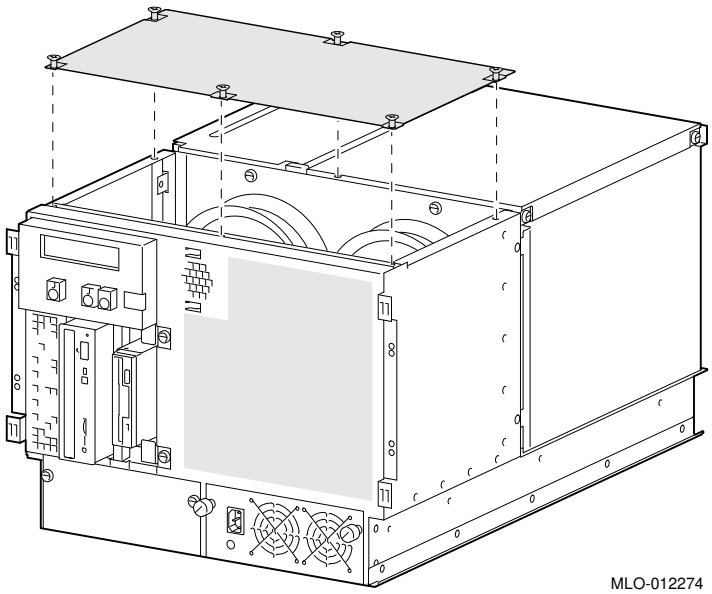

Note

The mass storage compartment cover requires a number 1 Phillips screwdriver to loosen the 6 quarter-turn fasteners.

Figure 7–7 Accessing the PCI/EISA Compartment

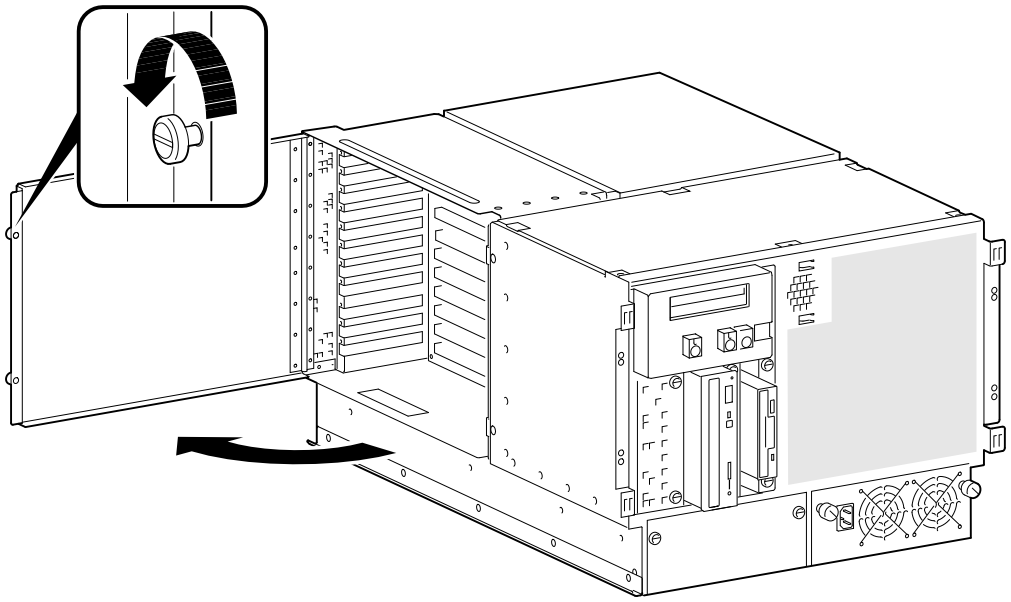

Figure 7–8 Accessing the System Bus Compartment

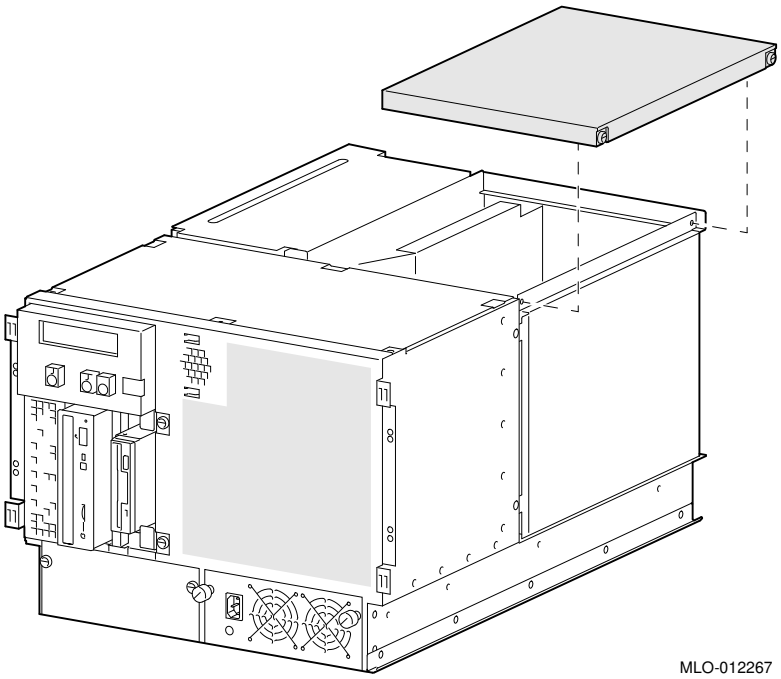

7.2.3 Cables

This section shows the routing for each cable in the system.

Figure 7–9 Floppy Drive Cable (34-pin)

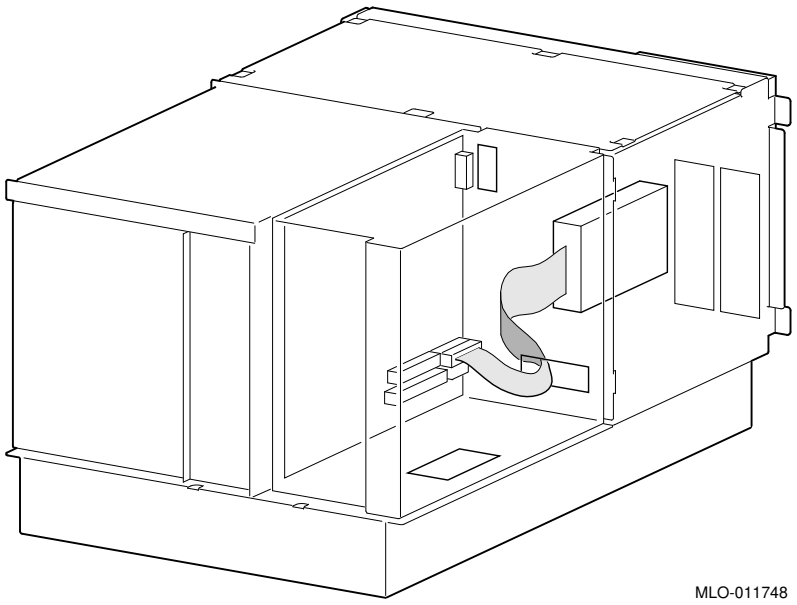

Figure 7–10 Multinode Fan/Storage Device Cable (12-pin to 6-pin)

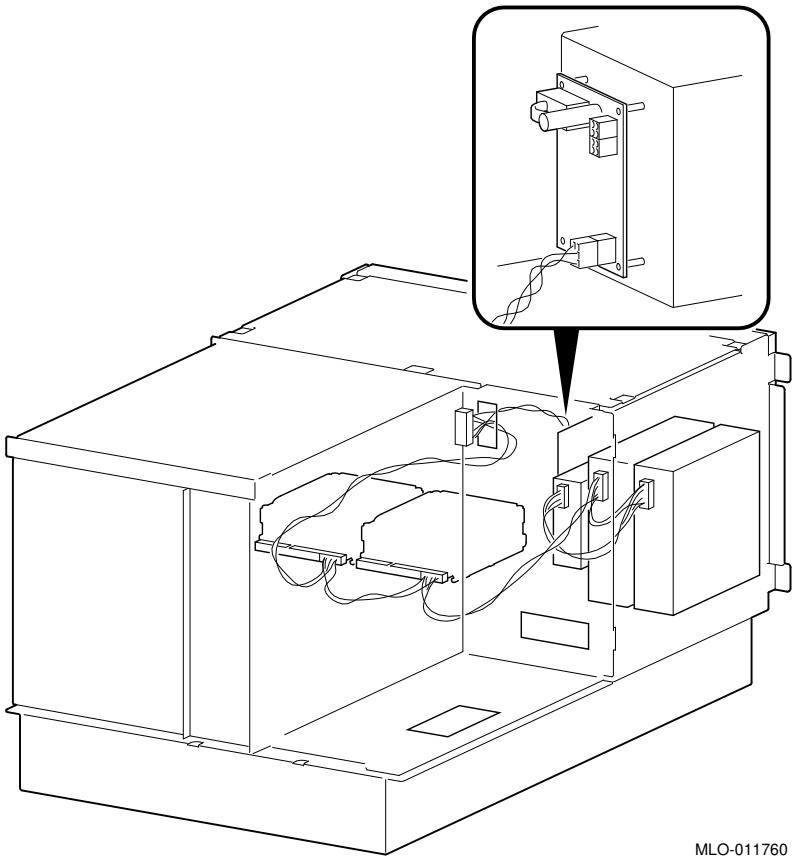

Figure 7–11 OCP Module Cable (10-pin)

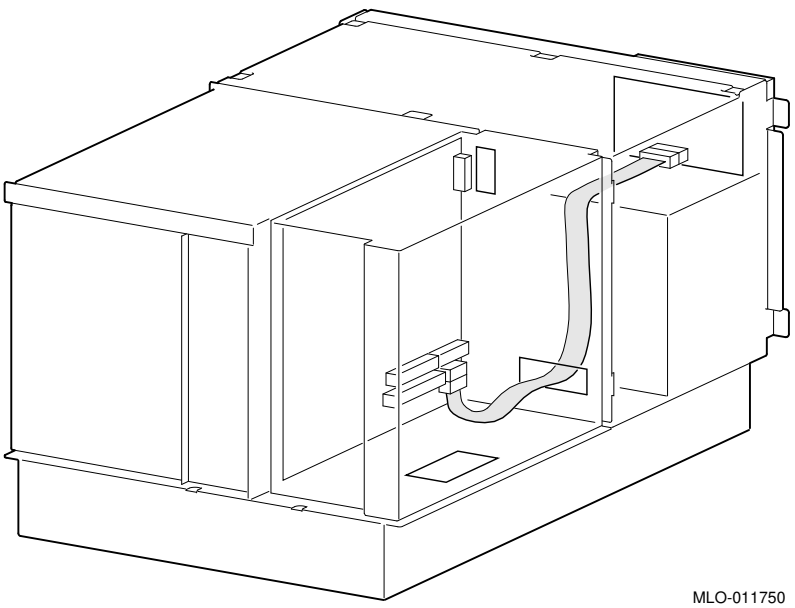

Figure 7–12 Power Cord

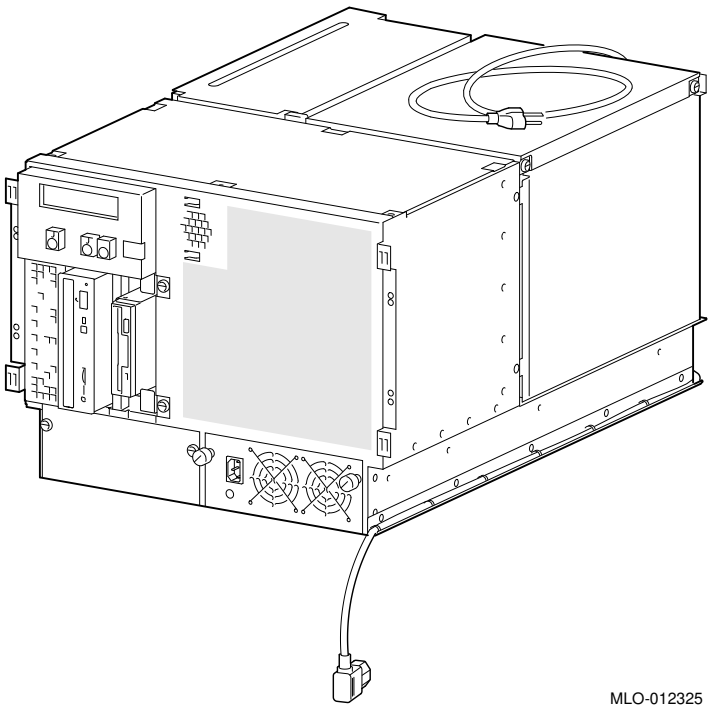

Table 7–2 lists the country-specific power cables.

Table 7–2 Power Cord Order Numbers

Country	Power Cord BN Number	Digital Number
U.S., Japan, Canada	Included	17-00083-51
Australia, New Zealand	BN19J-2E	17-00198-13
Central European (Aus, Bel, Fra, Ger, Fin, Hol, Nor, Swe, Por, Spa)	BN19D-2E	17-00199-22
U.K., Ireland	BN19B-2E	17000209-16
Switzerland	BN04B-2E	17-00210-12
Denmark	BN19L-2E	17-00310-06
Italy	BN19N-2E	17-00364-17
India, South Africa	BN19T-2E	17-00456-15
Israel	BN19Y-2E	17-00457-15

Figure 7–13 Power Supply Control Cable Assembly (15-pin to 24-pin)

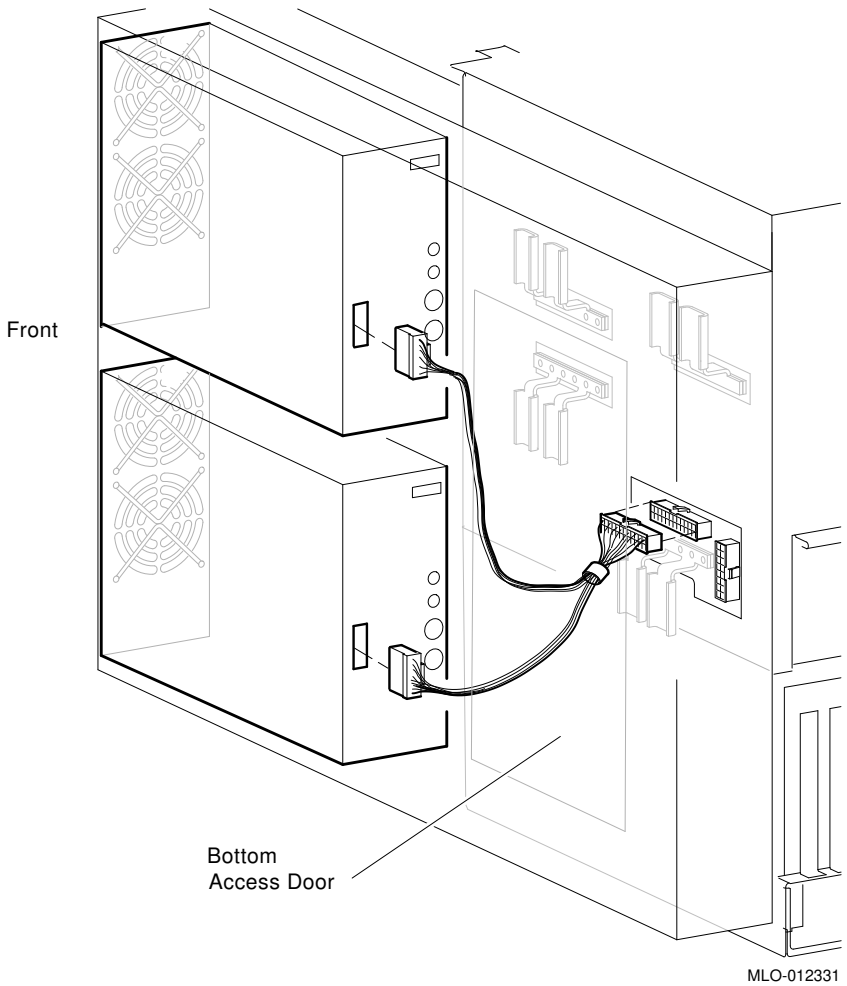

Figure 7–14 Power Supply 12V Cable Assembly (8-pin to 16-pin)

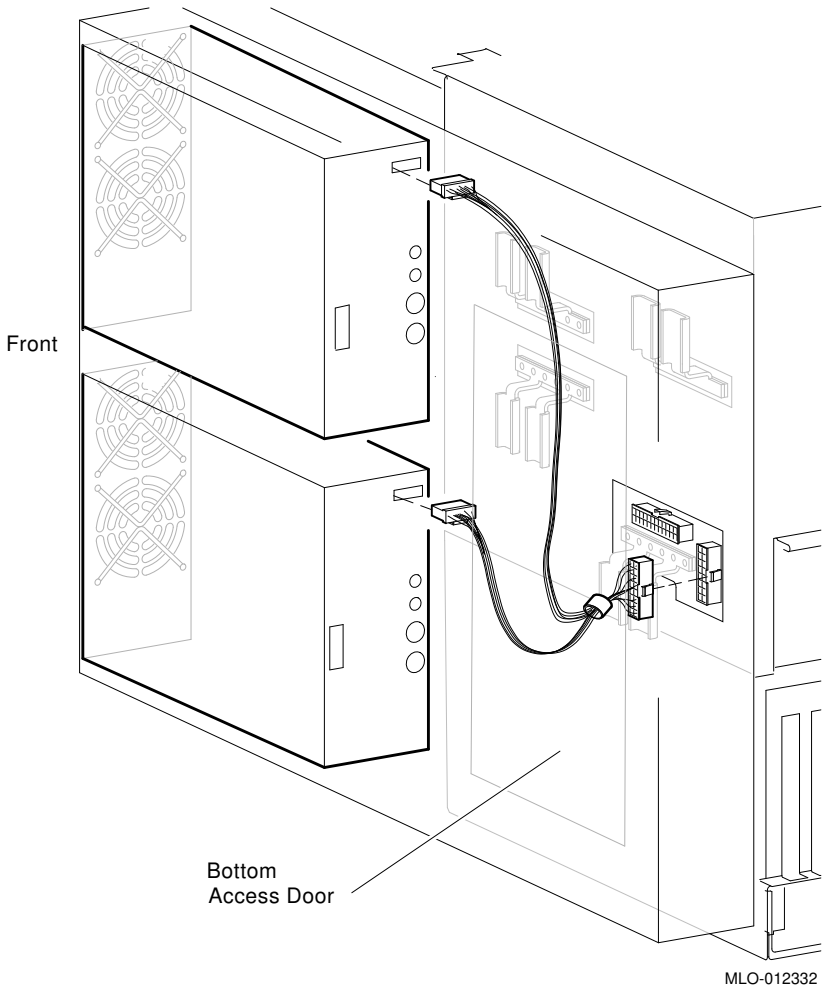

Figure 7–15 Remote I/O Cable (60-pin)

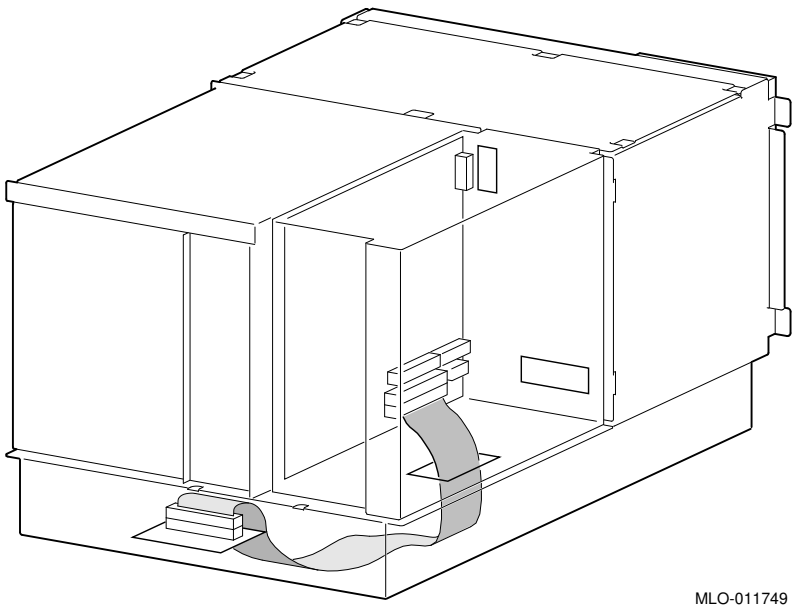

Figure 7–16 SCSI Storage-Media Cable (50-Pin)

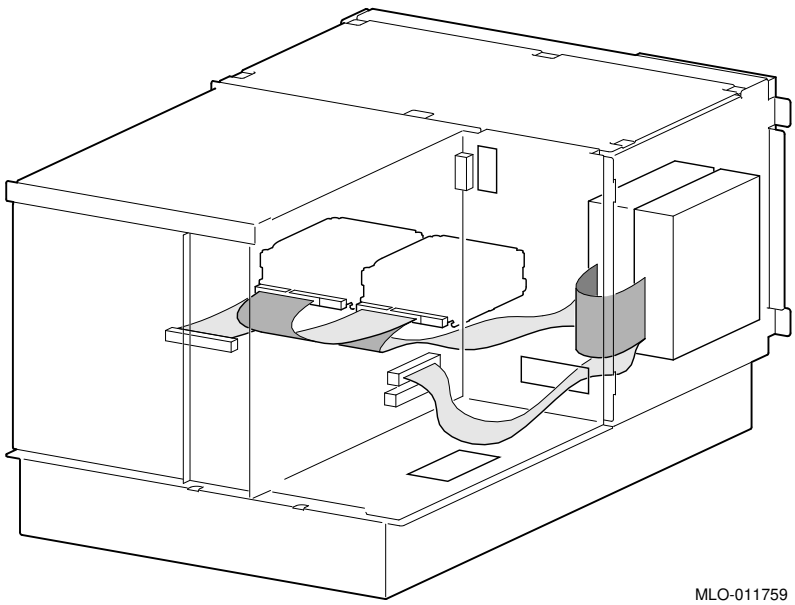

7.2.4 CPU Modules

Note

Different CPU types cannot be used within the same system. Example: A KN470 CPU module and a KN480 CPU module cannot be used in the same system.

Before replacing a CPU module, perform the following steps to verify which CPU is failing. After installing a new CPU, repeat this procedure to ensure that the new CPU configuration is working properly.

STEP 1: CHECK FOR ERRORS LOGGED TO THE CPU.

Verify that errors have been logged through the serial control bus before replacing a CPU module. Using the `show fru` and `show error` console commands, you can determine if errors are logged for a bad CPU.

If an event is logged for any other test than test number 00, the CPU should be replaced.

a. **Enter the** `show fru` **command to check for test-directed diagnostic (TDD) errors logged to the CPU.**

In the following example, a test-directed diagnostic (TDD) error is logged for CPU0.

```
P00>>> show fru

                                 Rev                    Events logged
 Slot   Option  Part#           Hw Sw   Serial#         SDD     TDD
   0    IO      B2222-AA        B2 0    NI53400096      00      00
   2    CPU0    B2020-AA        B2 10   KA426C0457      00      01
   3    CPU1    B2020-AA        B2 10   KA34509090      00      00
   4    MEM0    B2021-CA        A1 0    ML34398735      00      00
   7    MEM3    B2022-CA        A1 0    ML34100008      00      00
        .
        .
        .
P00>>>
```

b. **Enter the** `show error cpu0` **command to verify that an error, other than test number 00, is currently logged for that CPU.**

```
P00>>> show error cpu0

CPU0 Module EEROM Event Log

Test Directed Errors

Entry: 0  Test Number: 02       Subtest Number: 02
Parameter 1: 00000000,00000010
Parameter 2: ffffffff,ffffffff
Parameter 3: fffffeff,ffffffff

CPU Event Counters
CPU Event Counters
C3_CA_NOACK     0
   .
   .
   .
C3_DT_PAR_E     0
C3_DT_PAR_O     0

B-Cache Correctable Errors

Entry   Syndrome        Offset L        Offset H        Count

No Entries Found
P00>>>
```

STEP 2: IF THE CPU HAS AN ERROR LOGGED, OTHER THAN FOR TEST NUMBER 00, PERFORM POWER SHUTDOWN AND REPLACE THE CPU MODULE.

An event logged for test number 00 does not indicate a bad CPU. Test number 00 indicates that a CPU failover occurred sometime in the past.

Note

All systems must have a CPU module installed in system bus slot 2 (CPU0).

All system bus slots must be populated with a printed circuit board (PCB) module or a clear plastic module to assure proper airflow over each PCB module.

Figure 7–17 Removing CPU Modules

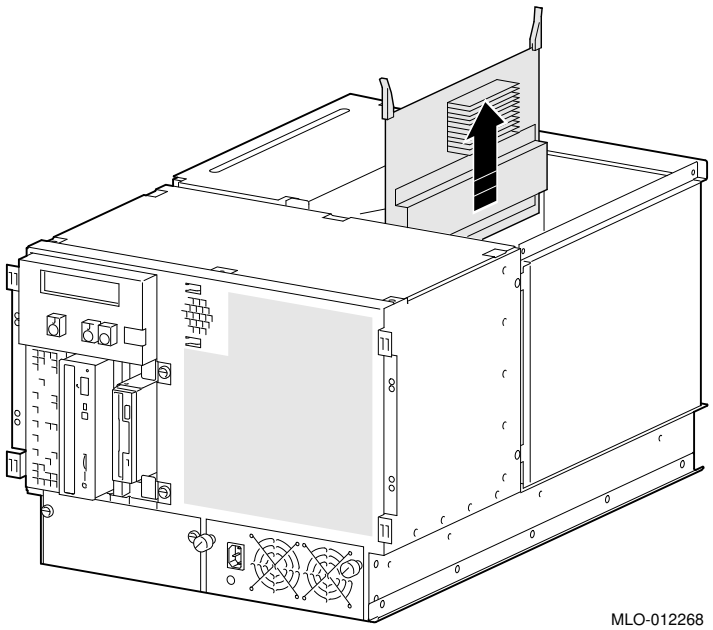

Warning: CPU and memory modules have parts that operate at high temperatures. Wait 2 minutes after power is removed before handling these modules.

STEP 3: VERIFY THAT ERRORS ARE NO LONGER LOGGED FOR THE CPU.

Use the `show fru` **command to verify that the errors are cleared.**

```
P00>>> show fru
```

```
                                  Rev                    Events logged
 Slot   Option  Part#           Hw Sw   Serial#          SDD     TDD
   0    IO      B2222-AA        B2 0    NI53400096       00      00
   2    CPU0    B2020-AA        B2 10   KA426C0457       00      00
   3    CPU1    B2020-AA        B2 10   KA34509090       00      00
   4    MEM0    B2021-CA        A1 0    ML34398735       00      00
   7    MEM3    B2022-CA        A1 0    ML34100008       00      00
        .
        .
        .
P00>>>
```

Note

To clear an event logged for test number 00 (CPU failover), use the `clear_error cpu#` command.

7.2.5 Fans

STEP 1: UNPLUG FANS.

STEP 2: REMOVE FAN ASSEMBLY AND REPLACE FAILING FAN.

Figure 7–18 Disconnecting Cables and Removing Fan Assembly

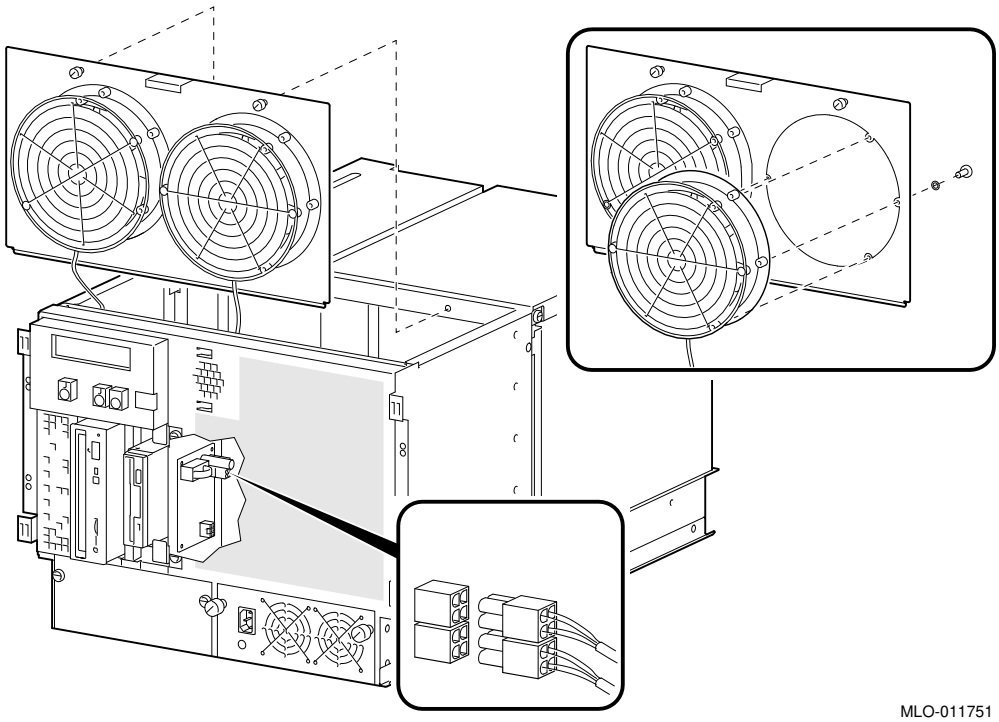

7.2.6 Fan Speed Control Board

Figure 7–19 Removing Fan Speed Control Board

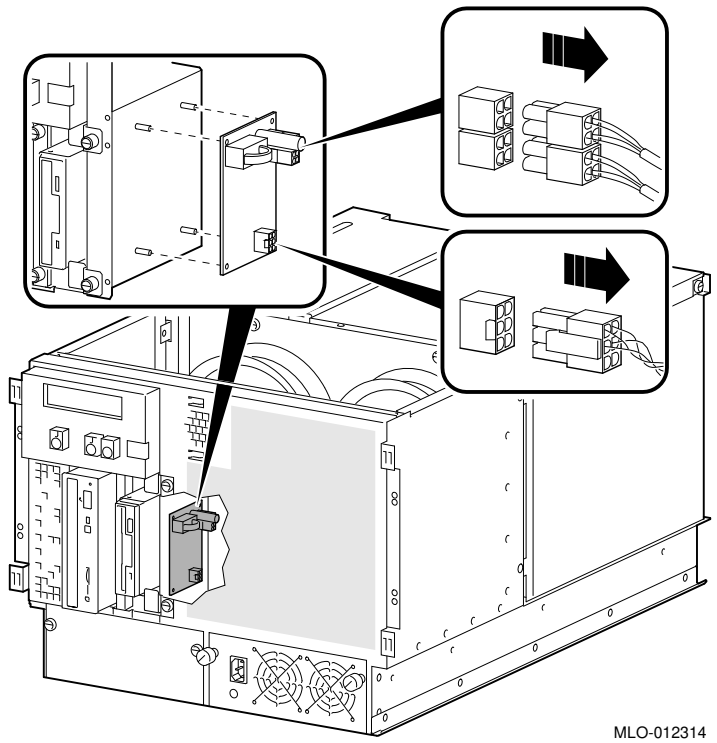

7.2.7 Remote I/O Module

STEP 1: REMOVE SCREW AT REAR CUTOUT.
STEP 2: REMOVE REMOTE I/O MODULE THOUGH BOTTOM COVER.

Figure 7–20 Removing Remote I/O Screw at Rear Cutout and Removing Module

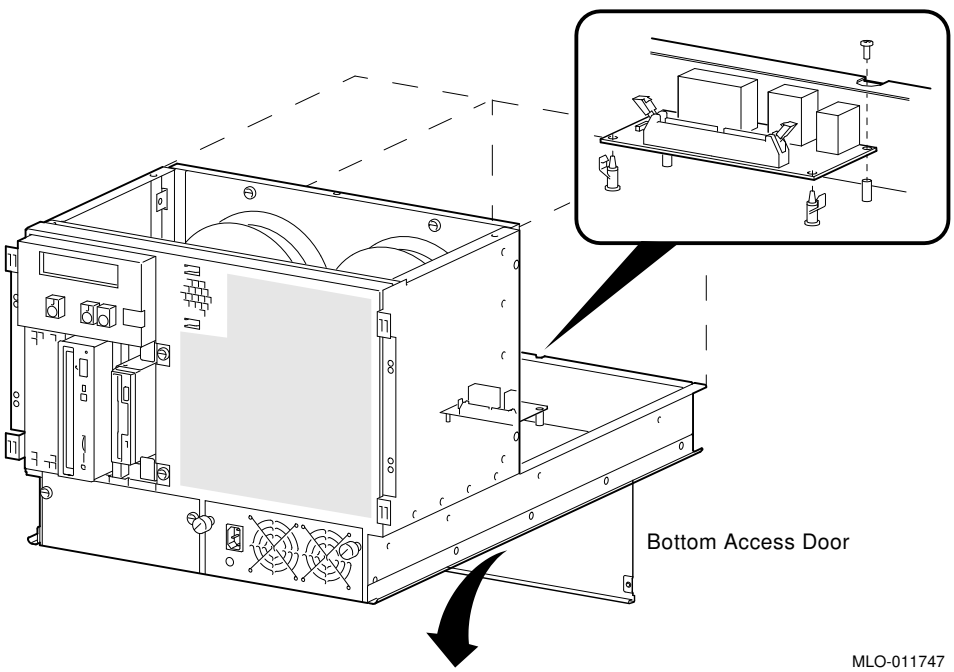

7.2.8 Memory Modules

Note

All system bus slots must be populated with a printed circuit board (PCB) module or a clear plastic module to assure proper airflow over each PCB module.

Warning: Memory and CPU modules have parts that operate at high temperatures. Wait 2 minutes after power is removed before handling these modules.

Figure 7–21 Removing Memory Modules

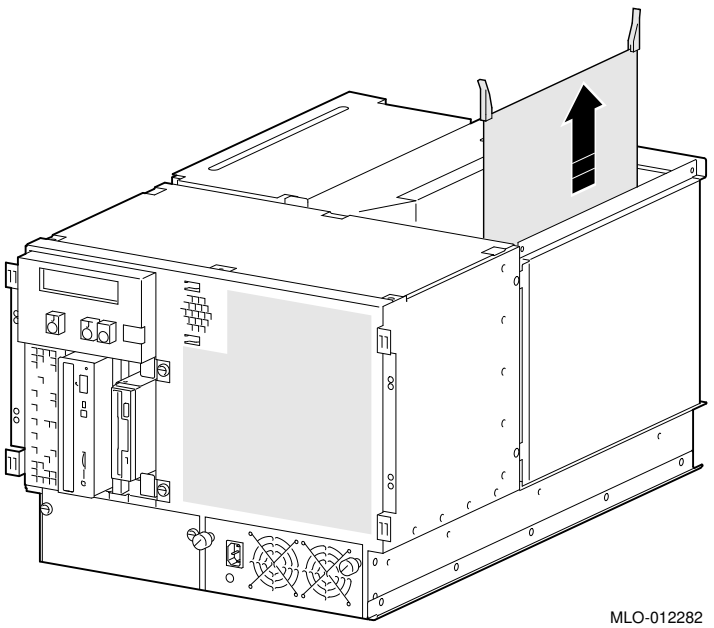

7.2.9 OCP Module

Figure 7–22 Removing OCP Module

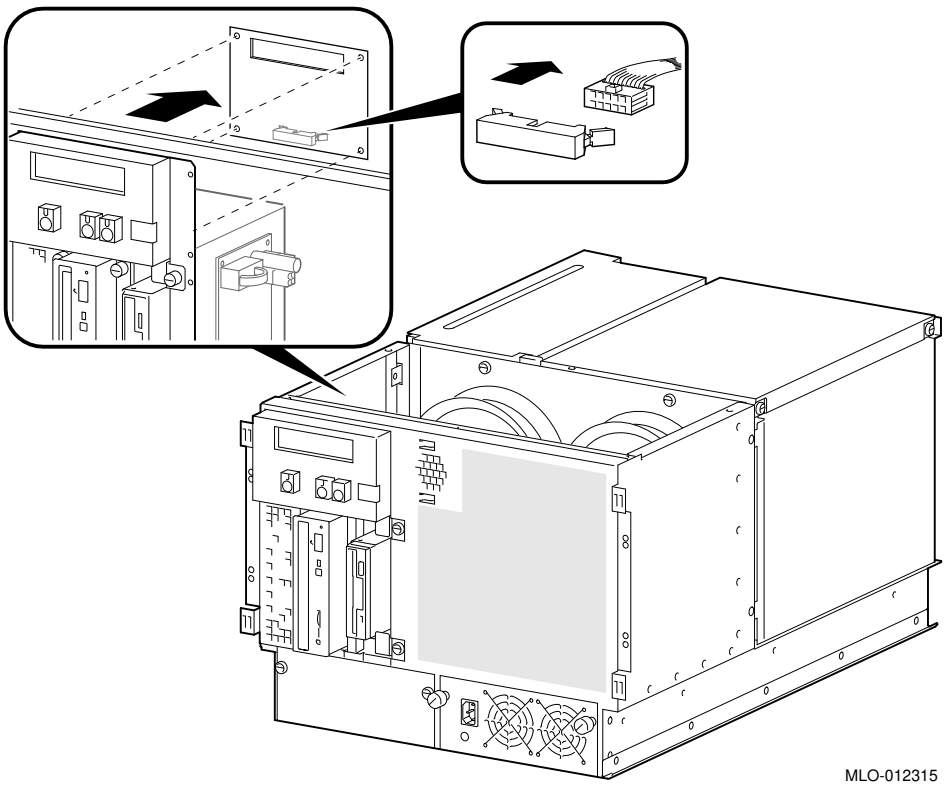

7.2.10 Power Supply

STEP 1: REMOVE POWER SUPPLY CONTROL AND 12V CABLES.

STEP 2: UNSCREW 3V AND 5V LEADS FROM POWER BUS BARS.

Use a number two Phillips screwdriver to remove the power supply leads.

When reinstalling cables, refer to Figure 7–31.

Figure 7–23 Removing Power Supply Cables

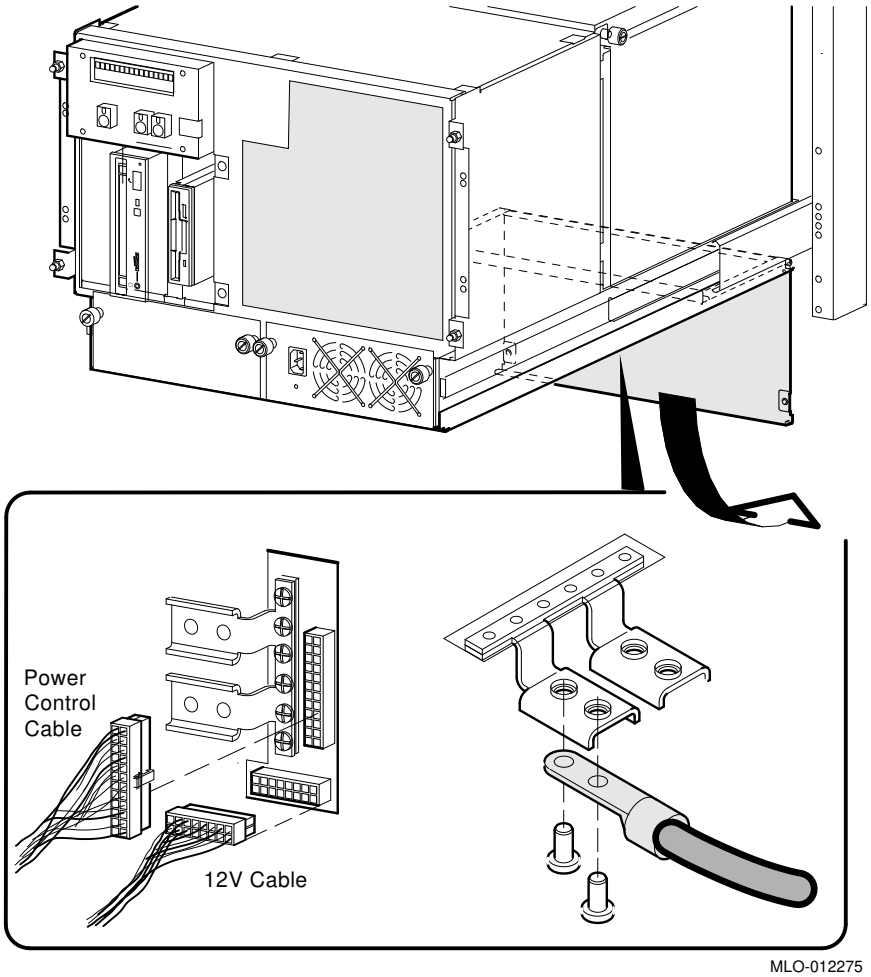

STEP 3: REMOVE POWER SUPPLY.

Figure 7–24 Removing Power Supply

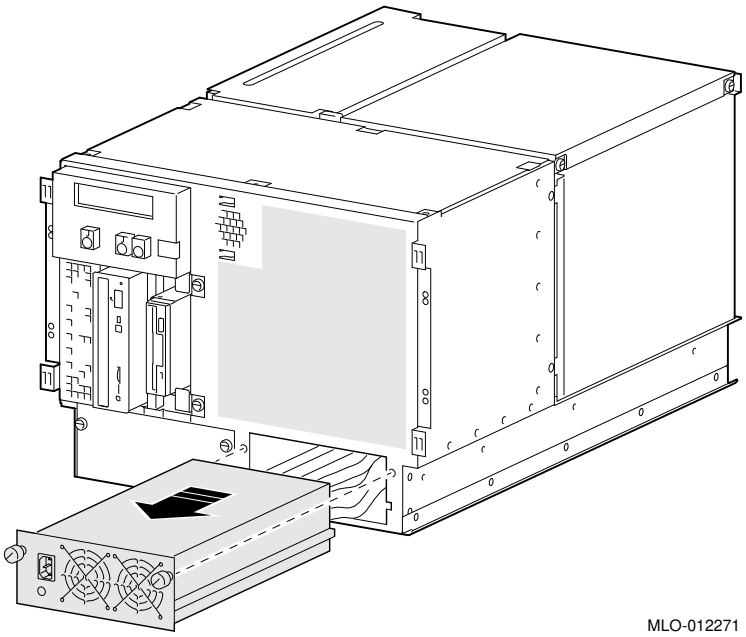

Warning: Hazardous voltages contained within. Do not service. Return to factory for service.

7.2.11 Speaker

Figure 7–25 Removing Speaker

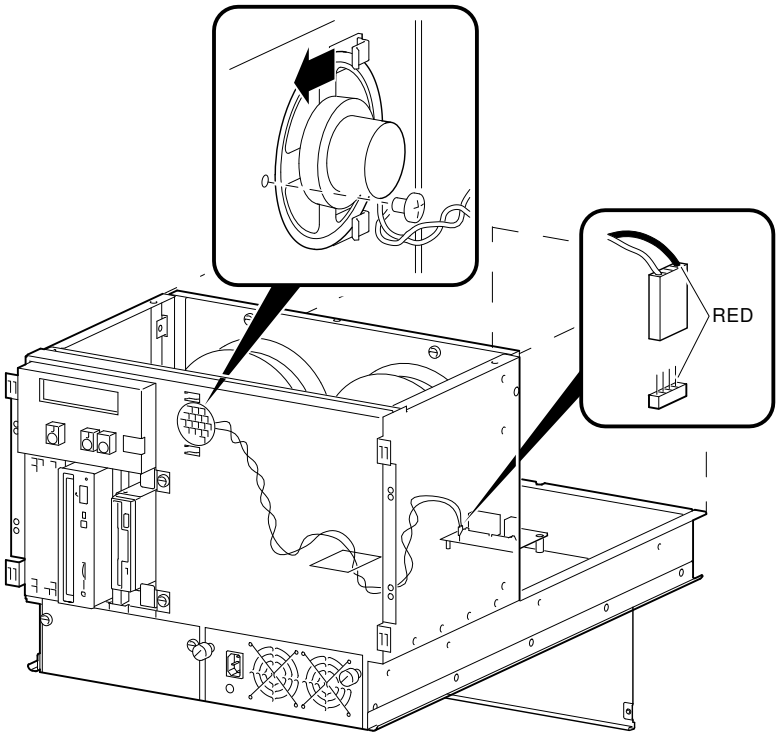

7.2.12 System Backplane

STEP 1: REMOVE ALL POWER SUPPLY CABLES FROM SYSTEM BACKPLANE.

From the bottom cover, remove the power supply control and 12V cables from their connectors beneath the backplane. Unscrew the 3V and 5V leads from the power bus bars. When reinstalling cables, refer to Figure 7–31.

Figure 7–26 Removing Power Supply Cables from System Backplane

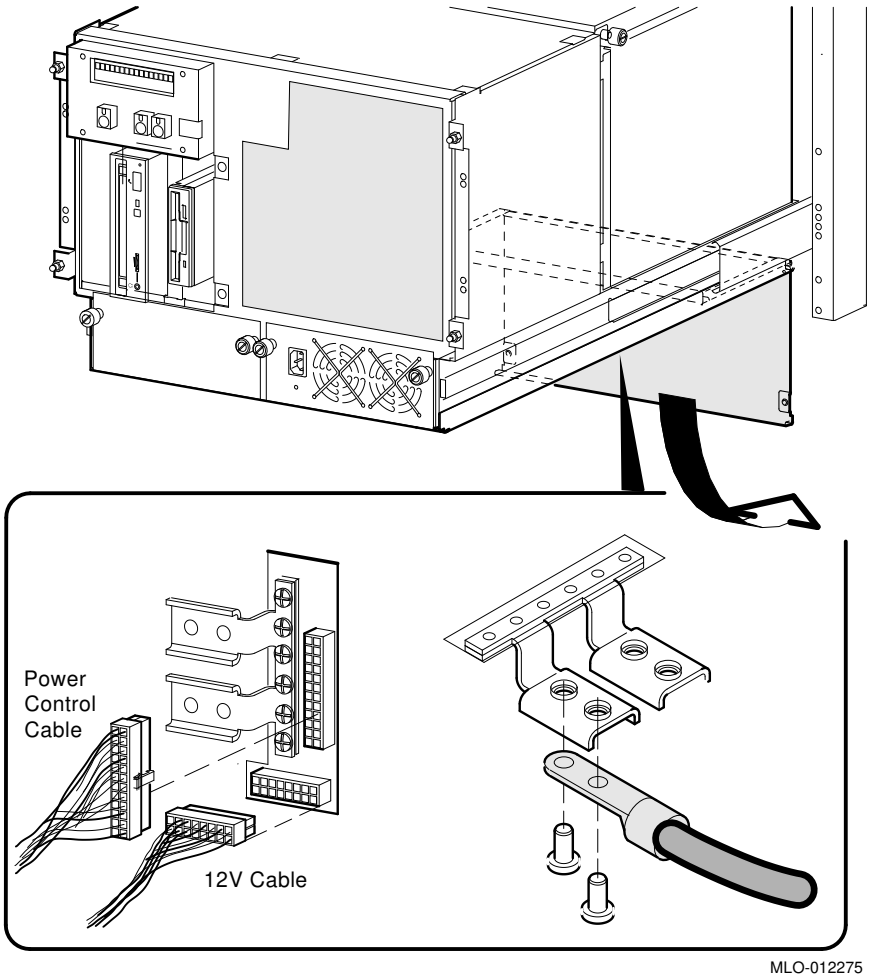

STEP 2: REMOVE CABLE BRACKET FROM REAR.

Cables can remain attached to the cable bracket.

Figure 7–27 Removing Cable Bracket from Rear of System

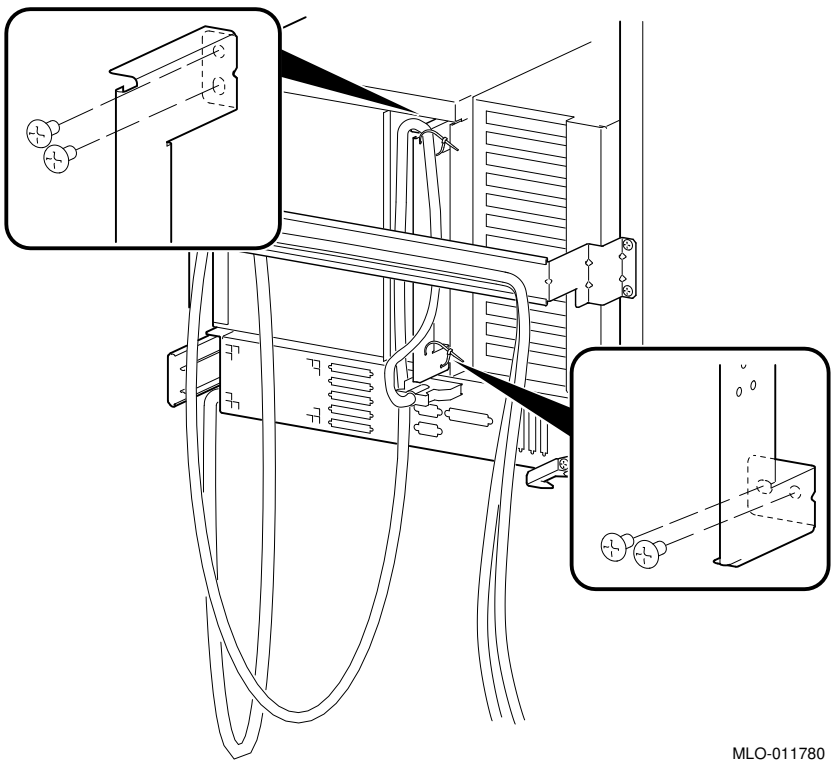

STEP 3: REMOVE ENCLOSURE FROM CABINET.

Figure 7–28 Removing Enclosure from Cabinet

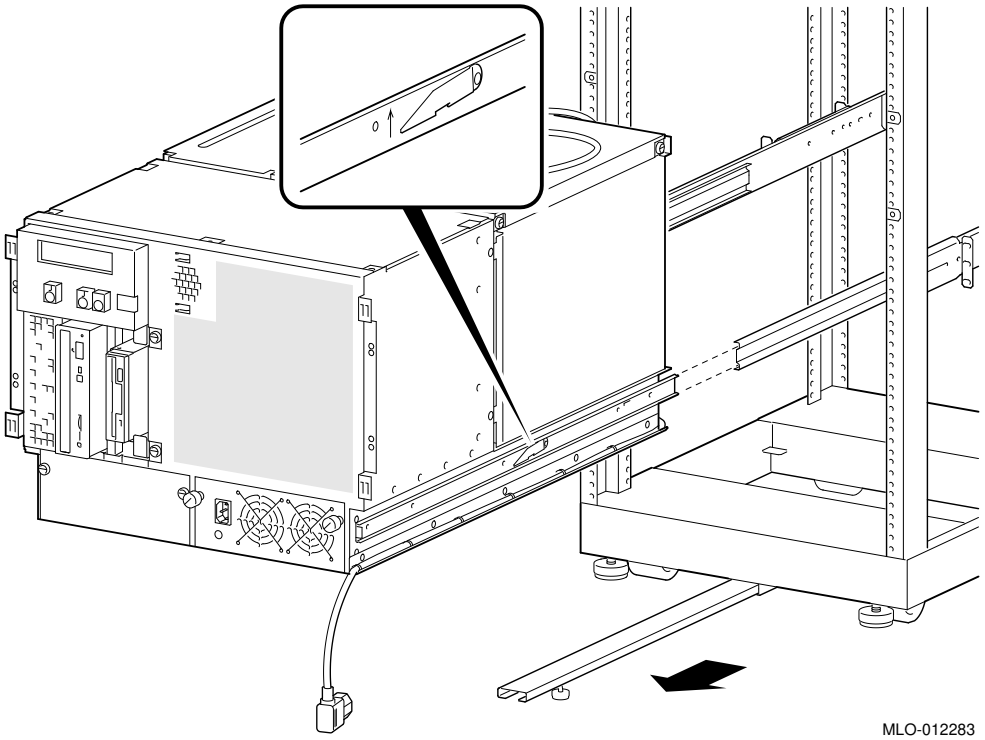

Warning

Use sufficient personnel and proper equipment when lifting and moving the rackmount server system. The fully loaded system weighs 45.5 kg (100 lb.)

STEP 4: REMOVE CPU AND MEMORY MODULES.

Warning: Memory and CPU modules have parts that operate at high temperatures. Wait 2 minutes after power is removed before handling these modules.

STEP 5: REMOVE ANY CABLES EXITING THE PCI/EISA BUS COMPARTMENT.

Remove any cables that exit from the PCI/EISA bus compartment. If you are going to replace the PCI/EISA backplane, remove all modules from the compartment as well.

STEP 6: SEPARATE THE FRONT AND REAR HALVES OF THE ENCLOSURE.

Remove the four screws and pull the rear half back until it separates from the front.

Figure 7–29 Separating Rackmount Enclosure

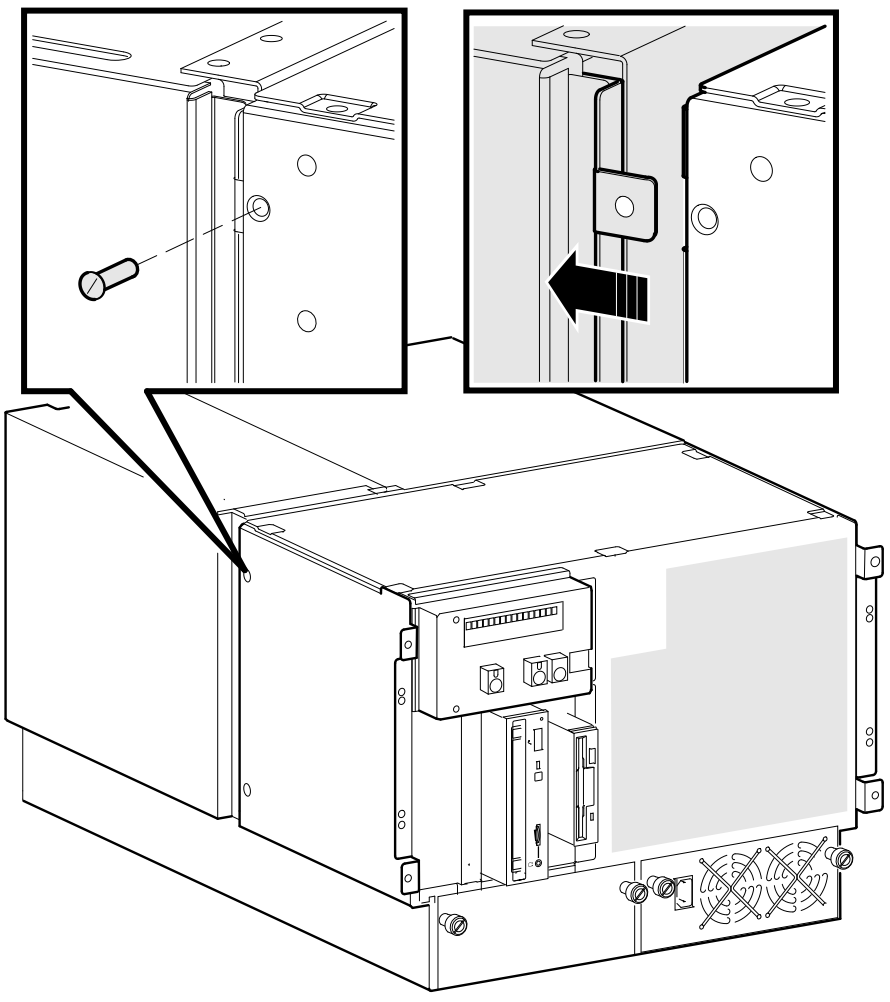

MLO-012272

STEP 7: LIFT OFF REAR HALF AND STAND ON REAR.

Figure 7–30 Lifting Off Rear Half

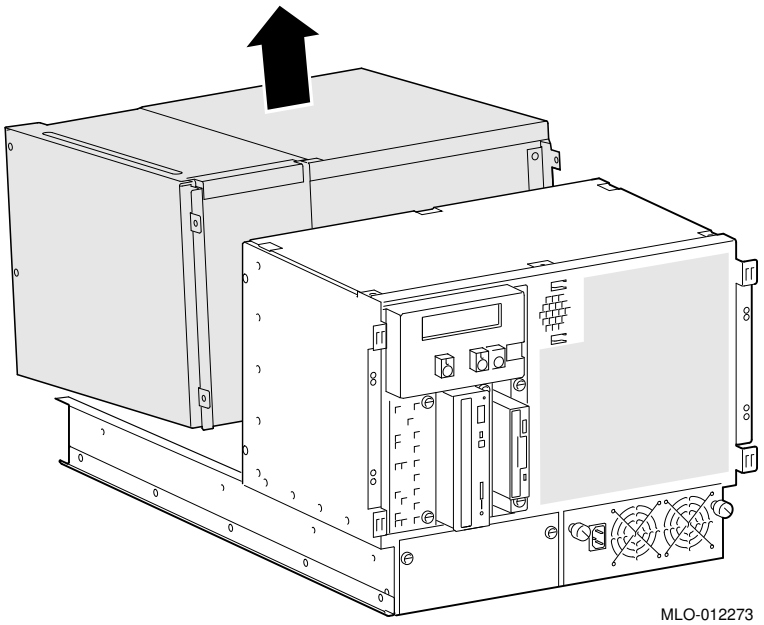

STEP 8: REMOVE FOUR POWER BUS BARS.

Figure 7–31 Removing Power Bus Bar

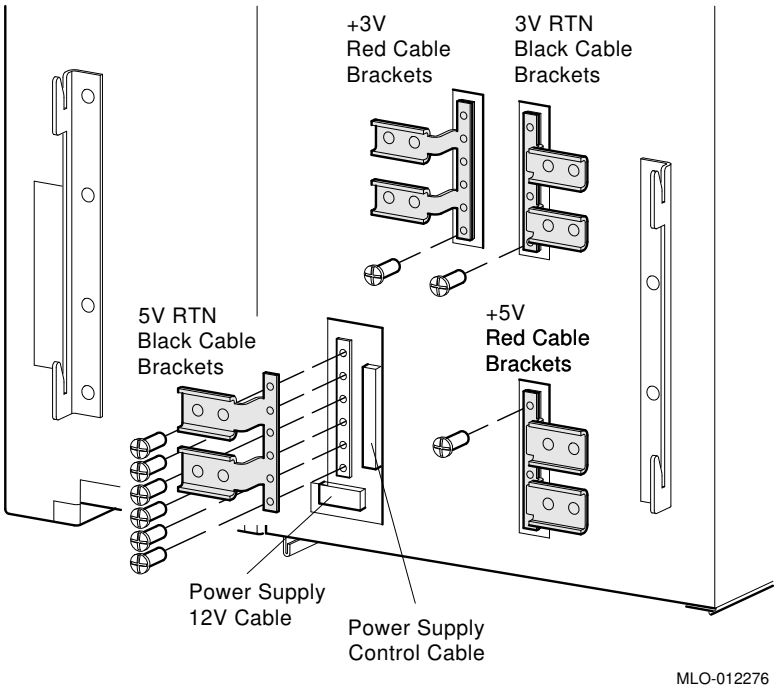

STEP 9: SEPARATE SYSTEM BUS AND PCI/EISA BUS COMPARTMENTS

Figure 7–32 Separating System Bus and PCI/EISA Bus Compartments

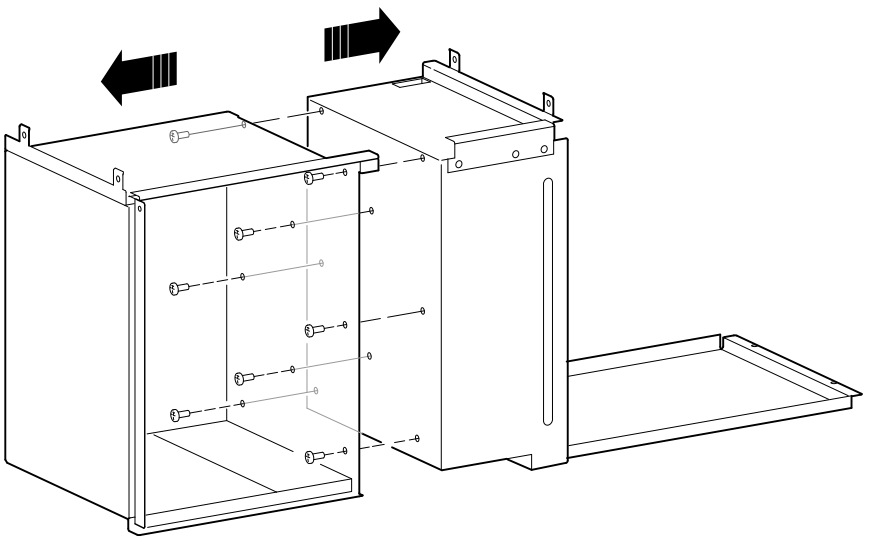

MLO-012277

STEP 10: REMOVE SYSTEM BUS BACKPLANE.

Figure 7–33 Removing System Bus Backplane

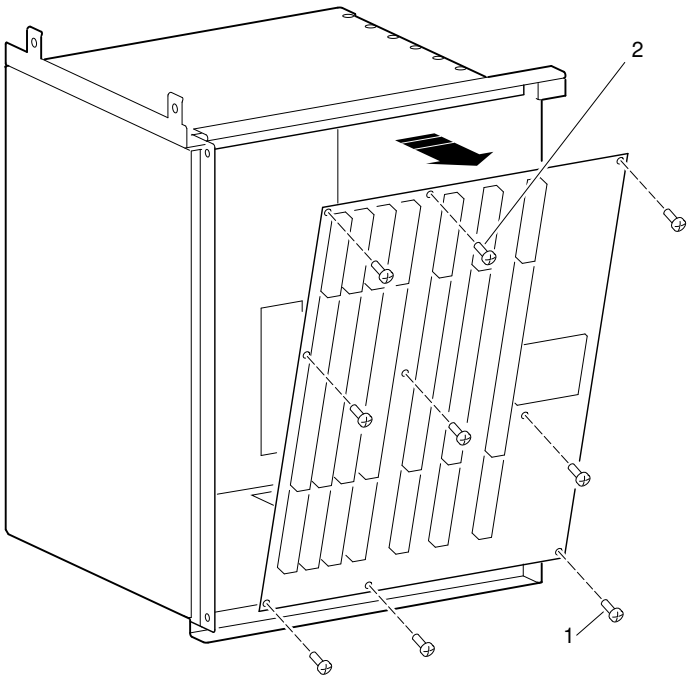

Note

When replacing backplane, install screws in order indicated.

STEP 11: REMOVE PCI/EISA BACKPLANE (IF REQUIRED).

Figure 7–34 Removing PCI/EISA Backplane

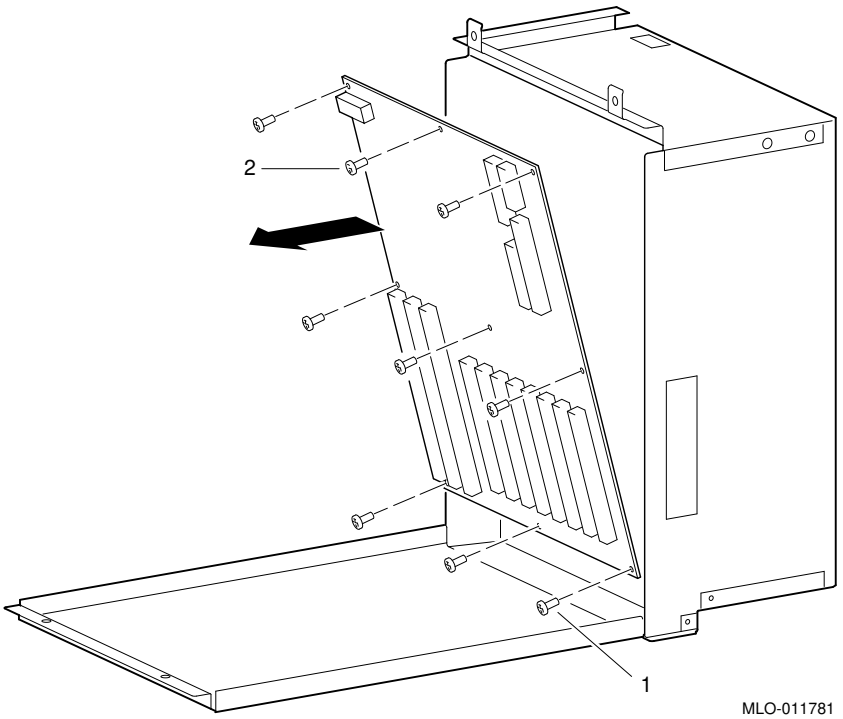

Note

When replacing backplane, install screws in order indicated.

STEP 12: MOVE NVRAM CHIP TO NEW BACKPLANE AND SET THE REMOTE SERVER MANAGEMENT JUMPER.

Move the socketed NVRAM chip (position E47) to the replacement PCI/EISA backplane and set the redundant power jumper (W1) to match previous setting.

STEP 13: SET THE FSL ENABLE SWITCH TO OFF; AND SET THE FSL CONSOLE UPDATE SWITCH TO ON.

The replacement backplane ships with incomplete firmware. The backplane contains no ARC console or fail-safe loader firmware. After installing the backplane, you will need to update the firmware by invoking the Loadable Firmware Utility (LFU) from the CD–ROM, as described in Step 14.

Figure 7–35 PCI/EISA Backplane: Jumper, Switches, Connectors, and NVRAM Chip

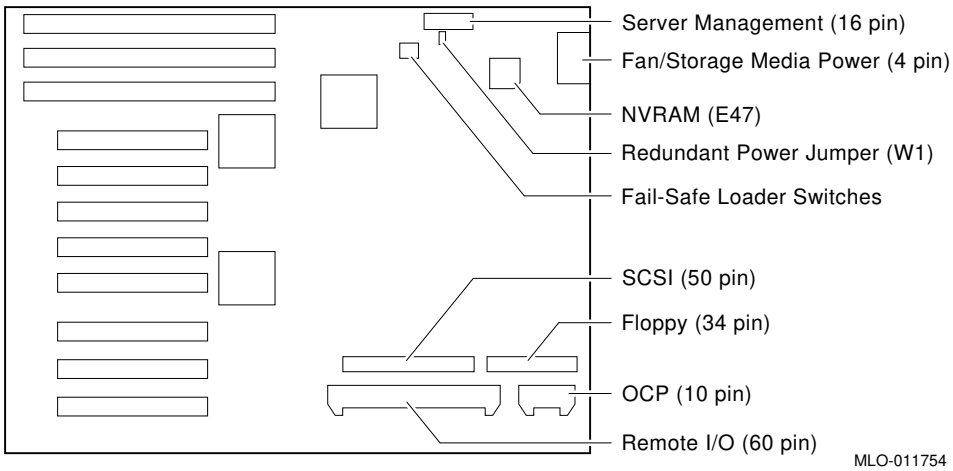

Figure 7–36 PCI/EISA Backplane FSL Switches and Redundant Power Jumper

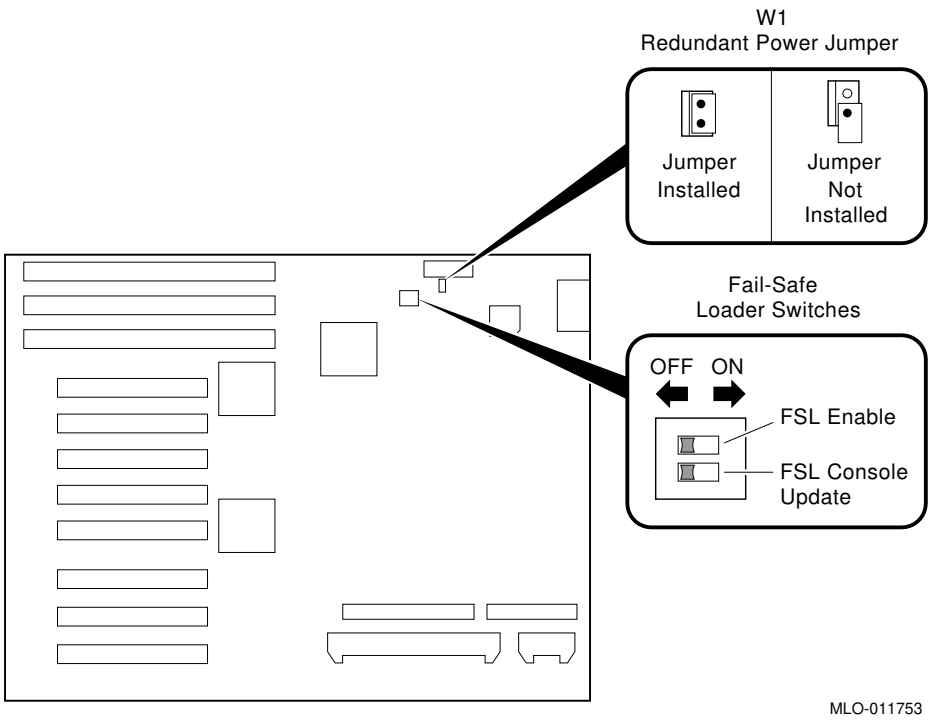

FSL Enable	Selects FSL console firmware when set to ON.
FSL Console Update	Allows writes to the fail-safe loader when set to ON. Used to update the fail-safe loader console firmware.
Redundant power (W1)	When installed, dual power supplies operate in redundant mode.

STEP 14: AFTER INSTALLING THE PCI/EISA BACKPLANE, UPDATE THE CONSOLE FIRMWARE.

Power up with the FSL console update switch set to ON. Invoke the LFU and update the firmware as described in the *Mandatory AlphaServer 2xxx Flash ROM Update*, EK-B2110-CL, shipped with the replacement backplane.

Note

After completing the update, remember to power down and set the FSL console update switch to OFF.

7.2.13 Fixed Disk Drives

Removing the fan assembly provides more room to access storage device connectors.

Figure 7–37 Removing Fixed Disk Drives

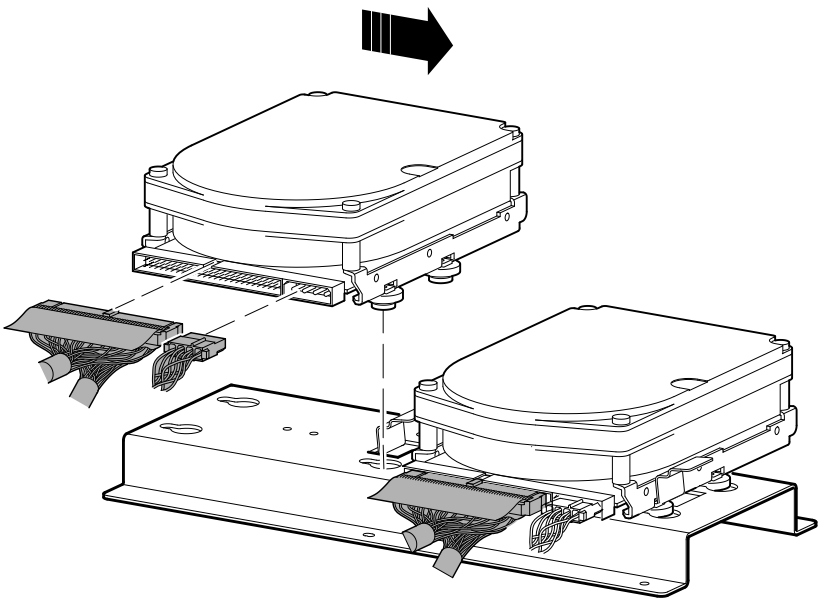

7.2.14 Removable Media

Removing the fan assembly provides more room to access storage device connectors. Slide drive to the right and lift to remove.

Figure 7–38 Removing a Removable-Media Drive

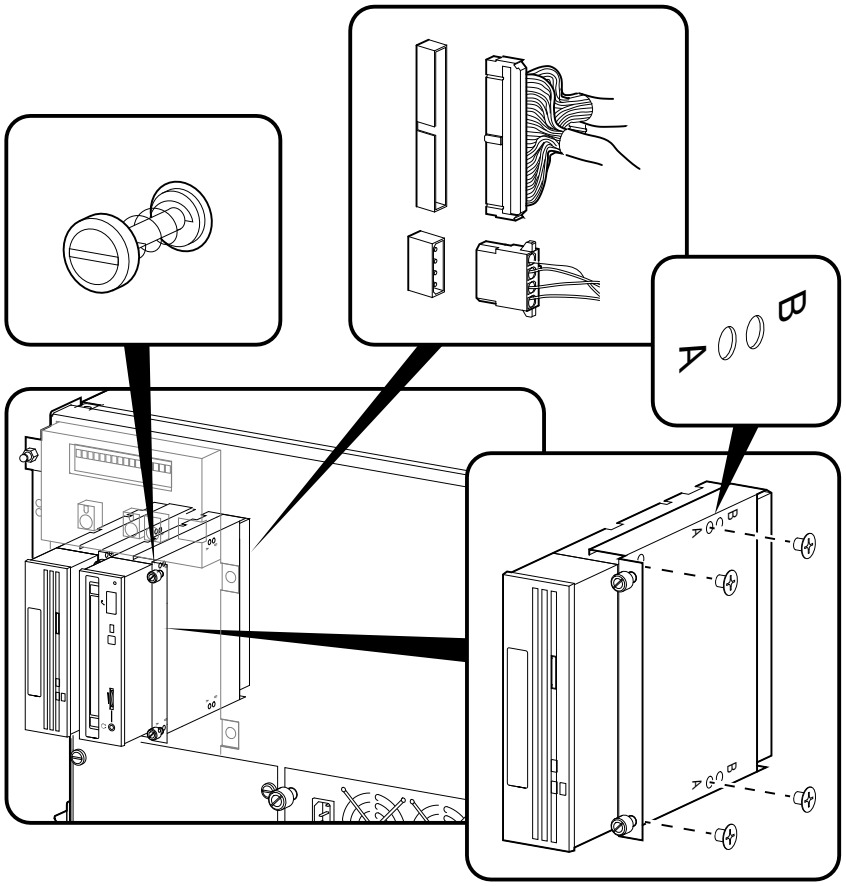

Note

RRDnn and TLZ0n drives use the set of bracket holes marked ''A'' in Figure 7–38.

The TZK11 drive uses the set of bracket holes marked ''B'' in Figure 7–38.

Figure 7–39 Removing Floppy Drive

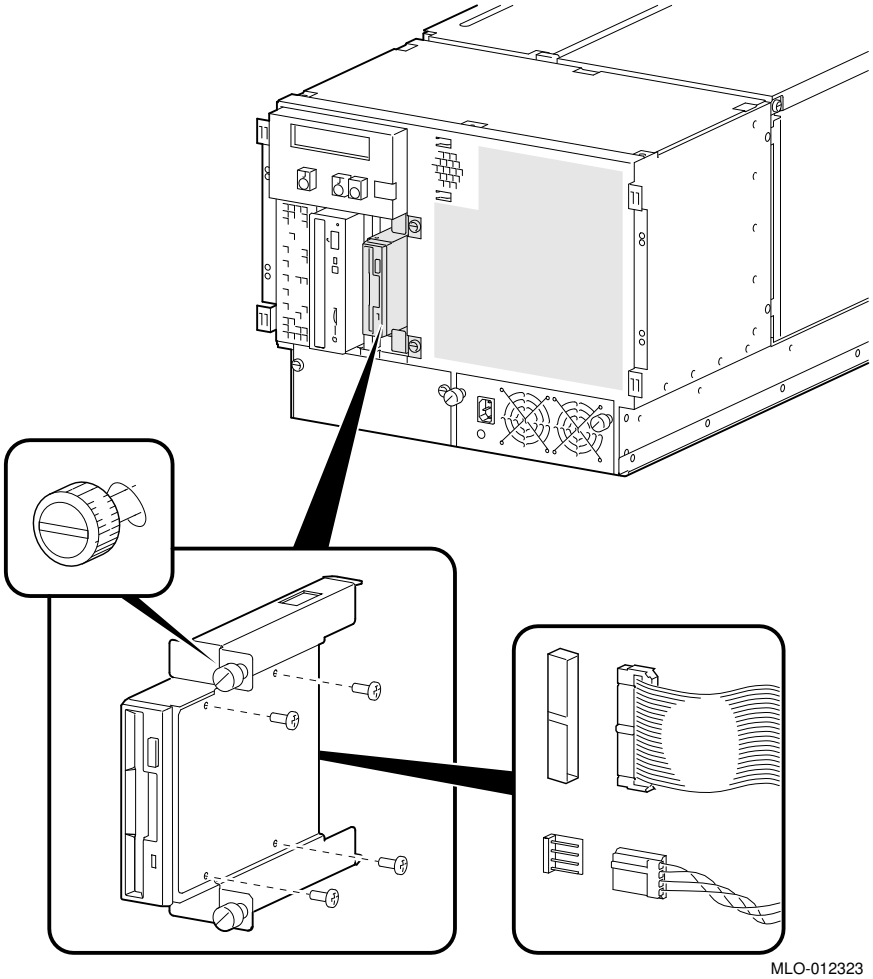

Glossary

10BaseT Ethernet network

IEEE standard 802.3-compliant Ethernet products used for local distribution of data. These networking products characteristically use twisted-pair cable.

ARC

User interface to the console firmware for operating systems that require firmware compliance with the *Windows NT Portable Boot Loader Specification*. ARC stands for Advanced RISC Computing.

AUI Ethernet network

Attachment unit interface. An IEEE standard 802.3-compliant Ethernet network connected with standard Ethernet cable.

autoboot

A system boot initiated automatically by software when the system is powered up or reset.

availability

The amount of scheduled time that a computing system provides application service during the year. Availability is typically measured as either a percentage of uptime per year or as system unavailability, the number of hours or minutes of downtime per year.

BA350 storage shelf

A StorageWorks modular storage shelf used for disk storage in some AlphaServer systems.

BA720 enclosure

The enclosure that houses the AlphaServer 2000 deskside pedestal system.

BA740-A9 enclosure

The enclosure that houses the AlphaServer 2100 large pedestal system.

BA740-B9 enclosure

The enclosure that houses the AlphaServer 2100A large pedestal system.

BA741 enclosure

The enclosure that houses the AlphaServer 2100 RM rack-mountable system and AlphaServer 2100 CAB system.

BA744-A9 enclosure

The enclosure that houses the AlphaServer 2100A RM rack-mountable system and AlphaServer 2100A CAB system.

backplane

The main board or panel that connects all of the modules in a computer system.

backup cache

A second, very fast cache memory that is closely coupled with the processor.

bandwidth

Term used to express the rate of data transfer in a bus or I/O channel. It is expressed as the amount of data that can be transferred in a given time, for example megabytes per second.

battery backup unit

A battery unit that provides power to the entire system enclosure (or to an expander enclosure) in the event of a power failure. Another term for uninterruptible power supply (UPS).

boot

Short for bootstrap. To load an operating system into memory.

boot device

The device from which the system bootstrap software is acquired.

boot flags

A flag is a system parameter set by the user. Boot flags contain information that is read and used by the bootstrap software during a system bootstrap procedure.

boot server

A computer system that provides boot services to remote devices such as network routers.

bootstrap

The process of loading an operating system into memory.

bugcheck

A software condition, usually the response to software's detection of an ''internal inconsistency,'' which results in the execution of the system bugcheck code.

bus

A collection of many transmission lines or wires. The bus interconnects computer system components, providing a communications path for addresses, data, and control information or external terminals and systems in a communications network.

bystander

A system bus node (CPU, standard I/O, or memory) that is not addressed by a current system bus commander.

byte

A group of eight contiguous bits starting on an addressable byte boundary. The bits are numbered right to left, 0 through 7.

cache memory

A small, high-speed memory placed between slower main memory and the processor. A cache increases effective memory transfer rates and processor speed. It contains copies of data recently used by the processor and fetches several bytes of data from memory in anticipation that the processor will access the next sequential series of bytes.

card cage

A mechanical assembly in the shape of a frame that holds modules against the system and storage backplanes.

carrier

The individual container for all StorageWorks devices, power supplies, and so forth. In some cases because of small form factors, more than one device can be mounted in a carrier. Carriers can be inserted in modular shelves. Modular shelves can be mounted in modular enclosures.

CD–ROM

A read-only compact disc. The optical removable media used in a compact disc reader.

central processing unit (CPU)

The unit of the computer that is responsible for interpreting and executing instructions.

client-server computing

An approach to computing whereby a computer—the ‘‘server’’—provides a set of services across a network to a group of computers requesting those services—the ‘‘clients.’’

cluster

A group of networked computers that communicate over a common interface. The systems in the cluster share resources, and software programs work in close cooperation.

cold bootstrap

A bootstrap operation following a power-up or system initialization (restart). On Alpha AXP based systems, the console loads PALcode, sizes memory, and initializes environment variables.

commander

In a particular bus transaction, a CPU or standard I/O that initiates the transaction.

command line interface

One of two modes of operation in the AlphaServer operator interface. The command line interface supports the OpenVMS and Digital UNIX operating systems. It allows you to configure and test the system, examine and alter system state, and boot the operating system.

console mode

The state in which the system and the console terminal operate under the control of the console program.

console program

The code that the executes during console mode.

console subsystem

The subsystem that provides the user interface for a computer system when the operating system is not running.

console terminal

The terminal connected to the console subsystem. It is used to start the system and direct activities between the computer operator and the console subsystem.

CPU failover

On multiprocessor systems, functionality that allows the system to power up and boot the operating system even if only one CPU is working.

data bus

A bus used to carry data between two or more components of the system.

data cache

A high-speed cache memory reserved for the storage of data. Abbreviated as D-cache.

Digital UNIX

A general-purpose operating system based on the Open Software Foundation technology. Digital UNIX runs on the range of AlphaGeneration systems, from workstations to servers.

DEC VET

Digital DEC Verifier and Exerciser Tool. A multipurpose system diagnostic tool that performs exerciser-oriented maintenance testing.

diagnostic program

A program that is used to find and correct problems with a computer system.

direct-mapping cache

A cache organization in which only one address comparison is needed to locate any data in the cache, because any block of main memory data can be placed in only one possible position in the cache.

direct memory access (DMA)

Access to memory by an I/O device that does not require processor intervention.

DRAM

Dynamic random-access memory. Read/write memory that must be refreshed (read from or written to) periodically to maintain the storage of information.

DSSI

Digital's proprietary data bus that uses the System Communication Architecture (SCA) protocols for direct host-to-storage communications.

DSSI cluster

A cluster system that uses the DSSI bus as the interconnect between DSSI disks and systems.

DUP server

Diagnostic Utility Program server. A firmware program on-board DSSI devices that allows a user to set host to a specified device in order to run internal tests or modify device parameters.

ECC

Error correction code. Code and algorithms used by logic to facilitate error detection and correction.

EEPROM

Electrically erasable programmable read-only memory. A memory device that can be byte-erased, written to, and read from.

EISA bus

Extended Industry Standard Architecture bus. A 32-bit industry-standard I/O bus used primarily in high-end PCs and servers.

EISA Configuration Utility (ECU)

A feature of the EISA bus that helps you select a conflict-free system configuration and perform other system services. The ECU must be run whenever you add or move an EISA or ISA controller.

environment variables

Global data structures that can be accessed only from console mode. The setting of these data structures determines how a system powers up, boots the operating system, and operates.

Ethernet

IEEE 802.3 standard local area network.

Factory Installed Software (FIS)

Operating system software that is loaded into a system disk during manufacture. On site, the FIS is bootstrapped in the system.

fail-safe loader (FSL)

A program that allows you to power up without initiating drivers or running power-up diagnostics. From the fail-safe loader you can perform limited console functions.

Fast SCSI

An optional mode of SCSI-2 that allows transmission rates of up to 10 megabytes per second.

FDDI

Fiber Distributed Data Interface. A high-speed networking technology that uses fiber optics as the transmissions medium.

FIB

Flexible interconnect bridge. A converter that allows the expansion of the system enclosure to other DSSI devices and systems.

field-replaceable unit

Any system component that a qualified service person is able to replace on site.

firmware

Software code stored in hardware.

fixed-media compartments

Compartments that house nonremovable storage media.

Flash ROM

Flash-erasable programmable read-only memory. Flash ROMs can be bank- or bulk-erased.

FRU

Field-replaceable unit. Any system component that a qualified service person is able to replace on site.

full-height device

Standard form factor for 5 1/4-inch storage devices.

half-height device

Standard form factor for storage devices that are not the height of full-height devices.

halt

The action of transferring control of the computer system to the console program.

hose

The interface between the card cage and the I/O subsystems.

hot swap

The process of removing a device from the system without shutting down the operating system or powering down the hardware.

initialization

The sequence of steps that prepare the computer system to start. Occurs after a system has been powered up.

instruction cache

A high-speed cache memory reserved for the storage of instructions. Abbreviated as I-cache.

interrupt request lines (IRQs)

Bus signals that connect an EISA or ISA module (for example, a disk controller) to the system so that the module can get the system's attention via an interrupt.

I/O backplane

One of two backplanes on the AlphaServer 2000 system. The I/O backplane contains three PCI option slots and seven EISA option slots. It also contains a SCSI channel, diskette controller, two serial ports, and a parallel printer port.

ISA

Industry Standard Architecture. An 8-bit or 16-bit industry-standard I/O bus, widely used in personal computer products. The EISA bus is a superset of the ISA bus.

LAN

Local area network. A high-speed network that supports computers that are connected over limited distances.

latency

The amount of time it takes the system to respond to an event.

LED

Light-emitting diode. A semiconductor device that glows when supplied with voltage. A LED is used as an indicator light.

loopback test

Internal and external tests that are used to isolate a failure by testing segments of a particular control or data path. A subset of ROM-based diagnostics.

machine check/interrupts

An operating system action triggered by certain system hardware-detected errors that can be fatal to system operation. Once triggered, machine check handler software analyzes the error.

mass storage device

An input/output device on which data is stored. Typical mass storage devices include disks, magnetic tapes, and CD–ROM.

MAU

Medium attachment unit. On an Ethernet LAN, a device that converts the encoded data signals from various cabling media (for example, fiber optic, coaxial, or ThinWire) to permit connection to a networking station.

memory interleaving

The process of assigning consecutive physical memory addresses across multiple memory controllers. Improves total memory bandwidth by overlapping system bus command execution across multiple memory modules.

menu interface

One of two modes of operation in the AlphaServer operator interface. Menu mode lets you boot and configure the Windows NT operating system by selecting choices from a simple menu. The EISA Configuration Utility is also run from the menu interface.

modular shelves

In the StorageWorks modular subsystem, a shelf contains one or more modular carriers, generally up to a limit of seven. Modular shelves can be mounted in system enclosures, in I/O expansion enclosures, and in various StorageWorks modular enclosures.

MOP

Maintenance Operations Protocol. A transport protocol for network bootstraps and other network operations.

motherboard

The main circuit board of a computer. The motherboard contains the base electronics for the system (for example, base I/O, CPU, ROM, and console serial line unit) and has connectors where options (such as I/Os and memories) can be plugged in.

multiprocessing system

A system that executes multiple tasks simultaneously.

node

A device that has an address on, is connected to, and is able to communicate with other devices on a bus. Also, an individual computer system connected to the network that can communicate with other systems on the network.

NVRAM

Nonvolatile random-access memory. Memory that retains its information in the absence of power.

OCP

Operator control panel.

open system

A system that implements sufficient open specifications for interfaces, services, and supporting formats to enable applications software to:

- Be ported across a wide range of systems with minimal changes
- Interoperate with other applications on local and remote systems
- Interact with users in a style that facilitates user portability

OpenVMS Alpha operating system

A general-purpose multiuser operating system that supports AlphaGeneration computers in both production and development environments. OpenVMS Alpha software supports industry standards, facilitating application portability and interoperability. OpenVMS Alpha provides symmetric multiprocessing (SMP) support for Alpha-based multiprocessing systems.

operating system mode

The state in which the system console terminal is under the control of the operating system. Also called program mode.

operator control panel

The panel located behind the front door of the system, which contains the power-up/diagnostic display, DC On/Off button, Halt button, and Reset button.

PALcode

Alpha AXP Privileged Architecture Library code, written to support Alpha AXP processors. PALcode implements architecturally defined behavior.

PCI

Peripheral Component Interconnect. An industry-standard expansion I/O bus that is the preferred bus for high-performance I/O options. Available in a 32-bit and a 64-bit version.

portability

The degree to which a software application can be easily moved from one computing environment to another.

porting

Adapting a given body of code so that it will provide equivalent functions in a computing environment that differs from the original implementation environment.

power-down

The sequence of steps that stops the flow of electricity to a system or its components.

power-up

The sequence of events that starts the flow of electrical current to a system or its components.

primary cache

The cache memory that is the fastest and closest to the processor.

processor module

Module that contains the CPU chip.

program mode

The state in which the system console terminal is under the control of a program other than the console program.

RAID

Redundant array of inexpensive disks. A technique that organizes disk data to improve performance and reliability. RAID has three attributes:

- It is a set of physical disks viewed by the user as a single logical device.
- The user's data is distributed across the physical set of drives in a defined manner.
- Redundant disk capacity is added so that the user's data can be recovered even if a drive fails.

redundant

Describes duplicate or extra computing components that protect a computing system from failure.

reliability

The probability a device or system will not fail to perform its intended functions during a specified time.

responder

In any particular bus transaction, memory, CPU, or I/O that accepts or supplies data in response to a command/address from the system bus commander.

RISC

Reduced instruction set computer. A processor with an instruction set that is reduced in complexity.

ROM-based diagnostics

Diagnostic programs resident in read-only memory.

script

A data structure that defines a group of commands to be executed. Similar to a VMS command file.

SCSI

Small Computer System Interface. An ANSI-standard interface for connecting disks and other peripheral devices to computer systems. Some devices are supported under the SCSI-1 specification; others are supported under the SCSI-2 specification.

self-test

A test that is invoked automatically when the system powers up.

serial control bus

A two-conductor serial interconnect that is independent of the system bus. This bus links the processor modules, the I/O, the memory, the power subsystem, and the operator control panel.

serial ROM

In the context of the CPU module, ROM read by the DECchip microprocessor after reset that contains low-level diagnostic and initialization routines.

SIMM

Single in-line memory module.

SMP

Symmetric multiprocessing. A processing configuration in which multiple processors in a system operate as equals, dividing and sharing the workload.

SRM

User interface to console firmware for operating systems that expect firmware compliance with the *Alpha System Reference Manual (SRM)*.

storage array

A group of mass storage devices, frequently configured as one logical disk.

StorageWorks

Digital's modular storage subsystem (MSS), which is the core technology of the Alpha AXP SCSI-2 mass storage solution. Consists of a family of low-cost mass storage products that can be configured to meet current and future storage needs.

superpipelined

Describes a pipelined processor that has a larger number of pipe stages and more complex scheduling and control.

superscalar

Describes a processor that issues multiple independent instructions per clock cycle.

symmetric multiprocessing (SMP)

A processing configuration in which multiple processors in a system operate as equals, dividing and sharing the workload.

symptom-directed diagnostics (SDDs)

An approach to diagnosing computer system problems whereby error data logged by the operating system is analyzed to capture information about the problem.

system bus

The hardware structure that interconnects the CPUs and memory modules. Data processed by the CPU is transferred throughout the system via the system bus.

system disk

The device on which the operating system resides.

TCP/IP

Transmission Control Protocol/Internet Protocol. A set of software communications protocols widely used in UNIX operating environments. TCP delivers data over a connection between applications on different computers on a network; IP controls how packets (units of data) are transferred between computers on a network.

test-directed diagnostics (TDDs)

An approach to diagnosing computer system problems whereby error data logged by diagnostic programs resident in read-only memory (RBDs) is analyzed to capture information about the problem.

thickwire

One-half inch, 50-Ohm coaxial cable that interconnects the components in many IEEE standard 802.3-compliant Ethernet networks.

ThinWire

Ethernet cabling and technology used for local distribution of data communications. ThinWire cabling is thinner than thickwire cabling.

Token Ring

A network that uses tokens to pass data sequentially. Each node on the network passes the token on to the node next to it.

twisted pair

A cable made by twisting together two insulated conductors that have no common covering.

uninterruptible power supply (UPS)

A battery-backup option that maintains AC power to a computer system if a power failure occurs.

warm bootstrap

A subset of the cold bootstrap operation. On AlphaGeneration systems, during a warm bootstrap, the console does not load PALcode, size memory, or initialize environment variables.

wide area network (WAN)

A high-speed network that connects a server to a distant host computer, PC, or other server, or that connects numerous computers in numerous distant locations.

Windows NT

''New technology'' operating system owned by Microsoft, Inc. The AlphaServer systems currently support the Windows NT, OpenVMS, and Digital UNIX operating systems.

write back

A cache management technique in which data from a write operation to cache is written into main memory only when the data in cache must be overwritten.

write-enabled

Indicates a device onto which data can be written.

write-protected

Indicates a device onto which data cannot be written.

write through

A cache management technique in which data from a write operation is copied to both cache and main memory.

Index

A

A: environment variable, 5–10
AC power-up sequence, 2–30
Acceptance testing, 3–25
arc command, 5–6
ARC interface, 5–5
  switching to SRM from, 5–7
AUTOLOAD environment variable, 5–11

B

BA740-B9 enclosure, xiii
  FRUs, 6–2
BA744-A9 enclosure, xiii
  FRUs, 7–2
Boot diagnostic flow, 1–7
Boot menu (ARC), 2–9

C

Card cage location, 5–28
cat el command, 2–10
CD–ROM LEDs, 2–29
CFG files, 2–17
clear_error command, 3–13
com1_baud, 5–58
COM2 and parallel port
  loopback tests, 3–4, 3–6
com2_baud, 5–58
Commands
  diagnostic, summarized, 3–2
  diagnostic-related, 3–3
  firmware console, functions of, 1–9
Commands (cont'd)
  to examine system configuration, 5–7
  to perform extended testing and exercising, 3–3
Configuration
  See also ECU
  console port, 5–56
  EISA boards, 5–35
  ISA boards, 5–36
  of environment variables, 5–18
  power supplies (BA740-B9), 5–51
  power supply (BA740-B9), 5–53
  power supply (BA744-A9), 5–53
  removable-media bus, 5–39
  verifying, OpenVMS and Digital UNIX, 5–12
  verifying, Windows NT, 5–7
Configuration rules
  fixed-media, 5–40
  removable-media, 5–45, 5–48
Console
  diagnostic flow, 1–5
  firmware commands, 1–9
Console commands, 1–9
  clear_error, 3–13
  diagnostic and related, summarized, 3–2
  exer_read, 3–14
  kill, 3–23
  kill_diags, 3–23
  memexer, 3–16
  memexer_mp, 3–18
  net -ic, 3–22
  net -s, 3–21
  nettest, 3–19

Console commands (cont'd)
set bootdef_dev, 5–18
set boot_osflags, 5–18
set envar, 5–18
show auto_action, 5–18
show config, 5–13
show device, 5–16
show envar, 5–18
show error, 3–10
show fru, 3–8
show memory, 5–17
show_status, 3–24
sys_exer, 3–6
test, 3–4
Console event log, 2–10
Console firmware
Digital UNIX, 5–5
OpenVMS, 5–5
Windows NT, 5–5
Console firmware diagnostics, 2–35
Console interfaces
switching between, 5–6
Console output, 5–57
Console port configurations, 5–56
CONSOLEIN environment variable, 5–10
CONSOLEOUT environment variable, 5–10
COUNTDOWN environment variable, 5–11
CPU failover, 2–9
CPU module, 5–28
Crash dumps, 1–10

D

DC power-up sequence, 2–30
DEC VET, 1–9, 3–25
DECevent, 1–8
interpreting system faults with, 4–5
Device name convention (SRM), 5–16
Device naming convention, 5–16
Devices
Windows NT firmware device display, 5–8
Windows NT firmware device names, 5–7
Diagnostic flows
boot problems, 1–7
console, 1–5
errors reported by operating system, 1–8
problems reported by console, 1–6
RAID, 2–15
Diagnostic tables
power, 1–3
Diagnostics
command summary, 3–2
command to terminate, 3–3, 3–23
console firmware-based, 2–35
firmware power-up, 2–33
power-up, 2–1
power-up display, 2–1
related commands, 3–3
related commands, summarized, 3–2
ROM-based, 1–9, 3–1
serial ROM, 2–34
showing status of, 3–24
Digital Assisted Services (DAS), 1–13
Disks
testing reads, 3–14

E

ECU
invoking console firmware, 5–33
procedure for running, 5–33
procedures, 5–36
starting up, 5–33
ecu command, 5–6, 5–34
ECU revisions, 1–11
edit command, 2–19
EEPROM
command to clear errors, 3–13
command to report errors, 3–10
EISA boards
configuring, 5–35
EISA bus
features of, 5–31
problems at power-up, 2–16
troubleshooting, 2–16
troubleshooting tips, 2–17

EISA devices
Windows NT firmware device names, 5–7
Environment variables
A:, 5–10
AUTOLOAD, 5–11
configuring, 5–18
CONSOLEIN, 5–10
CONSOLEOUT, 5–10
COUNTDOWN, 5–11
default Windows NT firmware, 5–10
ENABLEPCIPARITYCHECKING, 5–10
FLOPPY, 5–10
FLOPPY2, 5–11
FWSEARCHPATH, 5–10
KEYBOARDTYPE, 5–11
other, 5–11
setting and examining, 5–18
TIMEZONE, 5–10
Environment variables set during system configuration, 5–18
ERF/uerf error log format, 4–5
Error formatters
DECevent, 4–5
Error handling, 1–8
Error logging, 1–8, 4–5
event log entry format, 4–5
Error report formatter (ERF), 1–8
Errors
commands to clear, 3–13
commands to report, 3–8, 3–10
Ethernet
external loopback, 3–4, 3–6
Event logs, 1–8
Event record translation
Digital UNIX, 4–5
OpenVMS, 4–5
Exceptions
how PALcode handles, 4–1
exer_read command, 3–14

F

Fail-safe loader, 2–18
activating, 2–18
power-up, 2–18
Failover, 2–9
Fan failure, 1–3, 1–4, 2–23
Fast Track Service Help File, 1–10
Fault detection/correction, 4–1
KN4nn processor module, 4–1
Motherboard, 4–1
MS4nn memory modules, 4–1
system bus, 4–1
Faults, interpreting, 4–5
Firmware
console commands, 1–9
diagnostics, 3–1
Firmware device names, ARC, 5–10
Firmware environment variables, ARC, 5–10
Firmware power-up diagnostics, 2–33
Fixed media
storage problems, 2–13
Fixed-disk drives
installing in StorageWorks, 5–46
Fixed-disks
installing (BA740-B9), 5–47
installing (BA744-A9), 5–50
Fixed-media shelves
configuration rules, 5–40
Floppy drive
LEDs, 2–29
FLOPPY environment variable, 5–10
FLOPPY2 environment variable, 5–11
Formats
Windows NT firmware device names, 5–7
FRUs
BA740-B9 enclosure, 6–2
BA744-A9 enclosure, 7–2
commands to clear errors, 3–13
commands to report errors, 3–8, 3–10

FWSEARCHPATH environment variable, 5–10

H

Halt button
LED, 2–26
Halt button LED
interpreting at power up, 2–26
Hard-disk drives
installing in BA744-A9 enclosure, 5–50
installing in StorageWorks, 5–46
Hot swap, 5–46, 6–24

I

I/O backplane, 5–30
I/O bus, EISA features, 5–31
Information resources, 1–10
init -driver command, 2–19
Initialization, 3–25
Installation recommendations, 1–10
Interfaces
switching between, 5–6
Internet files
Firmware updates, 1–11
OpenVMS patches, 1–11
supported options list, 1–12
systems and options catalog, 1–12
technical information, 1–11
Interrupt lines
and EISA, 2–18
IRQs
and EISA, 2–18
ISA boards
configuring, 5–36

K

kill command, 3–23
kill_diags command, 3–23

L

LEDs
CD–ROM drive, 2–29
floppy drive, 2–29
functions of, 2–22
halt button, 2–26
power supply, 2–23
storage device, 2–27
StorageWorks, 2–27
types, 2–22
Logs
event, 1–8
Loopback tests, 1–9
COM2 and parallel ports, 3–4, 3–6
command summary, 3–3

M

Machine check/interrupts, 4–3
processor, 4–3
processor corrected, 4–3
system, 4–3
Maintenance strategy, 1–1
service tools and utilities, 1–8
Mass storage
described, 5–39
Mass storage problems
at power-up, 2–12
fixed media, 2–13
removable media, 2–14
memexer command, 3–16
memexer_mp command, 3–18
Memory module
displaying information for, 5–17
Memory modules
minimum and maximum, 5–30
Memory, main
exercising, 3–16
Modules
CPU, 5–28
memory, 5–30

more el command, 2–10
Motherboard, 5–30
MS45x memory modules, 5–30

N

net -ic command, 3–22
net -s command, 3–21
nettest command, 3–19
nvram file, 2–19

O

Operating system
  boot failures, reporting, 1–8
  crash dumps, 1–10
  exercisers, 1–9
Operator control panel
  See also Power-up/diagnostic display, 2–2
Operator control panel display, 2–2 to 2–4
Operator interfaces, switching between, 5–6
Options
  system bus, 5–27
Overtemperature, 2–23

P

PCI bus
  problems at power-up, 2–16
  troubleshooting, 2–16
PCI-to-PCI bridge, 5–38
PCI/EISA backplane
  power supply jumper, 2–31
Power problems
  diagnostic table, 1–3
  power supply failure, 2–23
Power supply
  configuration (BA740-B9), 5–51
  configuration (BA744-A9), 5–53
  configurations (BA740-B9), 5–53
  LEDs, 2–23
  W1 jumper (BA740-B9), 5–53
Power supply LEDs
  interpreting, 2–26
Power supply mode jumper, 2–31
Power supply modes (BA740-B9), 5–51
Power-on tests, 2–29
Power-up
  sequence, 2–29
Power-up diagnostics, 2–33
Power-up displays
  interpreting, 2–1
Power-up screen, 2–8
Power-up sequence
  AC, 2–30
  DC, 2–30
Power-up test description and FRUs, 2–4
Power-up/diagnostic display, 2–2
Power-up/diagnostic display messages
  CONSOLE STARTED, 2–2
  CPU STATUS, 2–2
  FAIL, 2–2
  STARTING CPU #, 2–2
  SYSTEM RESET, 2–2
  TEST, 2–2
Processor machine check, 4–3
Processor-corrected machine check, 4–4

R

RAID
  diagnostic flow, 2–15
RAID problems, 2–15
Redundant power jumper W1, 5–53
Removable media
  storage problems, 2–14
Removable-media
  installing (BA740-B9), 5–45
  installing (BA744-A9), 5–48
Removable-media bus
  configuring (BA740-B9), 5–39
ROM-based diagnostics (RBDs), 1–9
  diagnostic-related commands, 3–3
  performing extended testing and exercising, 3–3
  running, 3–1
  utilities, 3–2

S

SCSI bus
  internal (BA740-B9), 5–41, 5–44
  onboard (BA744-A9), 5–45
SCSI devices
  Windows NT firmware device names, 5–7, 5–8
Serial ports, 5–57
  baud rates, 5–58
Serial ROM diagnostics, 2–34
Service
  tools and utilities, 1–8
set command (SRM), 5–18
show command (SRM), 5–18
show configuration command (SRM), 5–13
show device command (SRM), 5–16
show error command (SRM), 3–10
show fru command (SRM), 3–8
show memory command (SRM), 5–17
show_status command (SRM), 3–24
SRM interface, 5–5
  switching to ARC from, 5–6
Storage device LEDs, 2–27
Storage shelf
  See StorageWorks
StorageWorks
  fixed disks, installing, 5–46
  fixed disks, swapping, 5–46
  internal (BA740-B9), 5–40
  internal, configuring, 5–40
  LEDs, 2–27
System
  power-up displays, interpreting, 2–1
  troubleshooting categories, 1–2
System architecture, 5–4
System backplane, 5–30
  power supply jumper, 2–31
System bus
  location, 5–28
  transaction cycle, 4–4
  transaction types, 4–4
System bus configurations
  according to number of CPUs (BA740), 5–29
  according to number of CPUs (BA741), 5–29
System bus options, 5–27
System faults
  interpreting with DECevent analysis, 4–5
System installation
  recommended testing, 1–10
System machine check, 4–3
System module devices
  Windows NT firmware device names, 5–7
sys_exer command (SRM), 3–6

T

test command (SRM), 3–4
Testing
  See also Commands; Loopback tests
  acceptance, 3–25
  command summary, 3–2
  commands to perform extended exercising, 3–3
  memory, 3–16, 3–18
  with DEC VET, 3–25
tga_sync_green, 5–58
TIMEZONE environment variable, 5–10
Tools, 1–8
  console commands, 1–9
  crash dumps, 1–10
  DEC VET, 1–9
  DECevent, 1–8
  error handling, 1–8
  log files, 1–8
  loopback tests, 1–9
  RBDs, 1–9
Training, 1–12
Troubleshooting
  See also Diagnostics
  See also RAID diagnostic flow
  actions before beginning, 1–1
  boot problems, 1–7

Troubleshooting (cont'd)
categories of system problems, 1–2
crash dumps, 1–10
diagnostic flows, 1–5, 1–6, 1–7, 1–8
EISA problems, 2–16
error report formatter, 1–8
errors reported by operating system, 1–8
interpreting the power-up/diagnostic display, 2–2
mass storage problems, 2–12
PCI problems, 2–16
power problems, 1–3
problem categories, 1–2
problems getting to console, 1–5
problems reported by the console, 1–6
RAID, 2–15
RAID problems, 2–15
with DEC VET, 1–9
with loopback tests, 1–9
with operating system exercisers, 1–9
with ROM-based diagnostics, 1–9

W

Windows NT firmware
Available hardware devices display, 5–8
default environment variables, 5–10
device names, 5–7

Z

ZLXp-E, 5–58

How to Order Additional Documentation

Technical Support

If you need help deciding which documentation best meets your needs, call 800-DIGITAL (800-344-4825) and press 2 for technical assistance.

Electronic Orders

If you wish to place an order through your account at the Electronic Store, dial 800-234-1998, using a modem set to 2400- or 9600-baud. You must be using a VT terminal or terminal emulator set at 8 bits, no parity. If you need assistance using the Electronic Store, call 800-DIGITAL (800-344-4825) and ask for an Electronic Store specialist.

Telephone and Direct Mail Orders

From	Call	Write
U.S.A.	DECdirect Phone: 800-DIGITAL (800-344-4825) Fax: (603) 884-5597	Digital Equipment Corporation P.O. Box CS2008 Nashua, NH 03061
Puerto Rico	Phone: (809) 781-0505 Fax: (809) 749-8377	Digital Equipment Caribbean, Inc. 3 Digital Plaza, 1st Street Suite 200 Metro Office Park San Juan, Puerto Rico 00920
Canada	Phone: 800-267-6215 Fax: (613) 592-1946	Digital Equipment of Canada Ltd. 100 Herzberg Road Kanata, Ontario, Canada K2K 2A6 Attn: DECdirect Sales
International	————	Local Digital subsidiary or approved distributor
Internal Orders[1] (for software documentation)	DTN: 264-3030 (603) 884-3030 Fax: (603) 884-3960	U.S. Software Supply Business Digital Equipment Corporation 10 Cotton Road Nashua, NH 03063-1260
Internal Orders (for hardware documentation)	DTN: 264-3030 (603) 884-3030 Fax: (603) 884-3960	U.S. Software Supply Business Digital Equipment Corporation 10 Cotton Road Nashua, NH 03063-1260

[1]Call to request an Internal Software Order Form (EN–01740–07).

Reader's Comments

AlphaServer 2100A/2100A RM/2100A CAB Series
Service Guide
EK–2100A–SV. A01

Your comments and suggestions help us improve the quality of our publications.

Thank you for your assistance.

I rate this manual's:	Excellent	Good	Fair	Poor
Accuracy (product works as manual says)	☐	☐	☐	☐
Completeness (enough information)	☐	☐	☐	☐
Clarity (easy to understand)	☐	☐	☐	☐
Organization (structure of subject matter)	☐	☐	☐	☐
Figures (useful)	☐	☐	☐	☐
Examples (useful)	☐	☐	☐	☐
Index (ability to find topic)	☐	☐	☐	☐
Page layout (easy to find information)	☐	☐	☐	☐

I would like to see more/less _____

_____

What I like best about this manual is _____

_____

What I like least about this manual is _____

_____

I found the following errors in this manual:

Page	Description
_____	_____
_____	_____
_____	_____

Additional comments or suggestions to improve this manual:

_____

_____

_____

For software manuals, please indicate which version of the software you are using: _____

_____

Name/Title _____ Dept. _____

Company _____ Date _____

Mailing Address _____

_____ Phone _____

Do Not Tear – Fold Here and Tape

digital™

No Postage
Necessary
If Mailed
in the
United States

BUSINESS REPLY MAIL

FIRST CLASS PERMIT NO. 33 MAYNARD MASS.

POSTAGE WILL BE PAID BY ADDRESSEE

DIGITAL EQUIPMENT CORPORATION
Shared Engineering Services
Digital Drive, MKO1-2/E12
P.O. Box 9501
Merrimack, NH 03054-9982

Do Not Tear – Fold Here