AlphaServer 2100A LP System

Installation/Owner's/Service Guide

Order Number: EK-21ALP-IN. A01

Digital Equipment Corporation
Maynard, Massachusetts

March 1996

The information in this document is subject to change without notice and should not be construed as a commitment by Digital Equipment Corporation. Digital Equipment Corporation assumes no responsibility for any errors that may appear in this document.

Restricted Rights: Use, duplication, or disclosure by the U.S. Government is subject to restrictions set forth in subparagraph (c)(1)(ii) of the Rights in Technical Data and Computer Software clause at DFARS 252.227-7013.

FCC NOTICE: This equipment has been tested and found to comply with the limits for a Class A digital device, pursuant to Part 15 of the FCC Rules. These limits are designed to provide reasonable protection against harmful interference when the equipment is operated in a commercial environment. This equipment generates, uses, and can radiate radio frequency energy and, if not installed and used in accordance with the instruction manual, may cause harmful interference to radio communications.

Any changes or modifications made to this equipment may void the user's authority to operate this equipment.

Operation of this equipment in a residential area may cause interference in which case the user at his own expense will be required to take whatever measures may be required to correct the interference.

© Digital Equipment Corporation 1996. All Rights Reserved.

Printed in U.S.A.

The postpaid Reader's Comments form at the end of this document requests your critical evaluation to assist in preparing future documentation.

The following are trademarks of Digital Equipment Corporation: AlphaServer, DEC, DECchip, Digital, Digital UNIX, OpenVMS, StorageWorks, VAX DOCUMENT, VMScluster, VT, and the DIGITAL logo.

COMPAQ is a registered trademark of Compaq Computer Corporation.
Intel is a trademark of Intel Corporation.
NCR is a registered trademark of NCR Corporation.
PostScript is a registered trademark of Adobe Systems Incorporated.
Windows NT is a trademark of Microsoft Corporation.

All other trademarks and registered trademarks are the property of their respective owners.

S3041

This document was prepared using VAX DOCUMENT Version 2.1.

EC:

Warning! This is a Class A product. In a domestic environment this product may cause radio interference in which case the user may be required to take adequate measures.

Achtung! Dieses ist ein Gerät der Funkstörgrenzwerklasse A. In Wohnbereichen können bei Betrieb dieses Gerätes Rundfunkstörungen auftreten, in welchen Fällen der Benutzer für entsprechende Gegenmaßnahmen verantwortlich ist.

Attention! Ceci est un produit de Classe A. Dans un environnement domestique, ce produit risque de créer des interférences radioeléctriques, il appartiendra alors à l'utilisateur de prendre les mesures spécifiques appropriées.

ACOUSTICS: Preliminary declared values per ISO 9296 and ISO 7779 (March 10, 1994):

	Sound Power Level L_{wAd}, B	**Sound Pressure Level L_{pAm}, dBA (Bystander Positions)**
Idle	6.5	43
Operating	6.5	43

Current values for specific configurations are available from Digital representatives. 1 B = 10 dBA.

SCHALLEMISSIONSWERTE: Verläufige Werteangaben nach ISO 9296 und ISO 7779/DIN EN27779 (10 March 1994):

	Schalleistungspegel L_{wAd}, B	**Schalldruckpegel L_{pAm}, dBA (Zuschauerpositionen)**
Leerlauf	6.5	43
Betrieb	6.5	43

Aktuelle Werte für spezielle Ausrüstungsstufen sind über die Digital Equipment Vertretungen erhältlich. 1 B = 10 dBA.

Für Bundesrepublik Deutschland
For Federal Republic of Germany
Pour la République féderale d'Allemagne

Hochfrequenzgerätezulassung und Betriebsgenehmigung

Bescheinigung des Herstellers/Importeurs:
Hiermit wird bescheinigt, daß die Einrichtung in Übereinstimmung mit den Bestimmungen der DBP-Verfügung 523/1969, Amtsblatt 113/1969, und Grenzwertklasse "A" der VDE0871, funkentstört ist.

Das Bundesamt für Zulassungen in der Telekommunikation (BZT), hat diesem Gerät eine EMV-Zulassungsnummer zugeteilt.

Betriebsgenehmigung:
Hochfrequenzgeräte dürfen erst in Betrieb genommen werden, nachdem hierfür von der für den vorgesehenen Aufstellungsort zuständigen Außenstelle des Bundesamtes für Post und Telekommunikation (BAPT) die Genehmigung erteilt ist.

Als Antrag auf Erteilung einer Genehmigung dient eine Anmeldepostkarte (Anhang des Handbuches) mit Angabe der EMV-Zulassungsnummer.

Der untere Teil der Anmeldepostkarte ist vom Betreiber zu vervollständigen und an die örtliche Außenstelle des Bundesamtes für Post und Telekommunikation (BAPT) zu schicken. Der obere Teil bleibt beim Gerät.

Betreiberhinweis:
Das Gerät wurde funktechnisch sorgfältig entstört und geprüft. Die Kennzeichnung mit der Zulassungsnummer bietet Ihnen die Gewähr, daß dieses Gerät keine anderen Fernmeldeanlagen einschließlich Funkanlagen stört.

Sollten bei diesen Geräten ausnahmsweise trotzdem, z.B. im ungünstigsten Fall beim Zusammenschalten mit anderen EDV-Geräten, Funkstörungen auftreten kann das im Einzelnen zusätzliche Funkentstörungsmaßnahmen durch den Benutzer erfordern.

Bei Fragen hierzu wenden Sie sich bitte an die örtlich zuständige Außenstelle Ihres Bundesamtes für Post und Telekommunikation (BAPT).

Externe Datenkabel:
Sollte ein Austausch der von Digital spezifizierten Datenkabel nötig werden, muß der Betreiber für eine einwandfreie Funkentstörung sicherstellen, daß Austauschkabel im Aufbau und Abschirmqualität dem Digital Originalkabel entsprechen.

Kennzeichnung:
Die Geräte werden bereits in der Fertigung mit der Zulassungsnummer gekennzeichnet und mit einer Anmeldepostkarte versehen. Sollte Kennzeichnung und Anmeldepostkarte übergangsweise nicht mit ausgeliefert werden kontaktieren Sie bitte das nächstgelegene Digital Equipment Kundendienstbüro.

この装置は，第一種情報装置（商工業地域において使用されるべき情報装置）で商工業地域での電波障害防止を目的とした情報処理装置等電波障害自主規制協議会（VCCI）基準に適合しております。

従って，住宅地域またはその隣接した地域で使用すると，ラジオ，テレビジョン受信機等に受信障害を与えることがあります。

取扱説明書に従って正しい取り扱いをして下さい。

Contents

Preface xv

1 Introduction

In This Chapter 1–1
The AlphaServer 2100A LP System 1–1
Characteristics 1–3
Components and Controls 1–5
Location of the Controls and Components 1–5
Components: Front of System 1–6
Operator Control Panel (OCP) 1–7
OCP Door 1–10
Components: Front Internal 1–11
Components: Top of System 1–11
Components: Rear of System 1–13

2 Installation

In This Chapter 2–1
Before Installing the System 2–1
Verifying the Site Preparation 2–2
Overview 2–2
Power Requirements 2–4
Power Cords 2–6
Tools Required 2–7
Unpacking the Shipment 2–8
Checking the Shipment 2–8
Accessories 2–9
Installing the System on the Slides 2–11
Overview 2–11
Tools Required 2–11
Preparing the Slides 2–11
Attaching the Slide Races 2–14

Cabinet Stability 2–14
Cabinet Rail-Hole Pattern 2–15
Determining the Installation Area 2–15
Attaching the Slides to the Cabinet Rails 2–17
Installing the U-Nuts 2–18
Mounting the System on the Slides 2–19
Aligning the System Slides to the Cabinet Rails 2–21
Attaching the Power Cord 2–22
Using the Interlock System 2–24
Installing the Interlock Actuator Bracket 2–24
Installing the Interlock Actuator Latches 2–26
Installing the Cable Management System 2–29
Cable Management: Cable Routing Guidelines 2–31
Connecting to Networks 2–33
Overview 2–33
Ethernet 2–33
Connecting Peripherals 2–34
Serial/Parallel Connections 2–34
Terminal Connections 2–36
Installing Keyboard/ Mouse/Video Extension Cables 2–38
Expanding the System 2–42

3 Setup and Basic Operation

In This Chapter 3–1
Turning the System On 3–2
Overview 3–2
Before You Begin 3–2
Checking the System Settings 3–3
Applying Power to the System 3–4
Checking the Diagnostic Indicators 3–6
Preboot Tasks 3–10
Switching Between Operating Systems 3–13
Booting the Operating System 3–14
Autobooting the Operating System 3–15
Turning the System Off 3–16
Before You Begin 3–16
Turning Off the DC Power 3–16
Extended Power-Down (AC Power) 3–18
Invoking Console Mode 3–19
Console Subsystem 3–19
Console Terminal 3–19
Console Mode 3–19

Invoking Console Mode 3–19
Using the Halt Button 3–20
Remote Access 3–20

4 Options and Upgrades

In This Chapter 4–1
Upgrade Overview 4–2
Planning Your Upgrade 4–2
Adding Third-Party Devices 4–3
Supported Options 4–4
Ordering Options 4–4
Verifying System Configuration 4–5
Before You Begin 4–5
Firmware Menu Options for Windows NT 4–5
Firmware Console Commands for Digital UNIX and OpenVMS 4–6
show config 4–6
show device 4–8
show memory 4–10
Setting and Showing Environment Variables 4–11
System Bus Options 4–12
CPU Modules 4–13
Memory Modules 4–14
Standard I/O Module 4–15
EISA Bus Options 4–16
ISA Bus Options 4–17
Identifying EISA and ISA Options 4–18
Configuring EISA and ISA Options 4–19
EISA Configuration Utility 4–19
System Configuration Diskette 4–19
Before Running the ECU 4–20
Starting the ECU 4–20
Configuring EISA Options 4–23
Configuring EISA/ISA Options 4–25
PCI Bus Options 4–27
SCSI Buses 4–29
Native SCSI Bus 4–29
Installing the 5.25-Inch Removable- Media Device 4–30
Installing Internal DSSI Cables 4–34
Internal DSSI Cable for EISA-to-DSSI Adapters 4–34
Installing the Internal DSSI Cable 4–34
Console Port Configurations 4–36

5 Troubleshooting the System

In This Chapter 5–1
Determining the Service Provider 5–2
Determine the Service Provider 5–2
Considerations Before Troubleshooting 5–2
Identifying Problems 5–3
Task Overview 5–4
Identifying and Resolving Problems 5–4
Determining the Type of Problem 5–5
Types of System Problems 5–5
Reporting Problems 5–6
Precall Checklist 5–6
Digital Support Center Contact Numbers 5–6
Power Problems 5–10
Problems Getting to Console Mode 5–11
Interpreting the OCP Power-Up/Diagnostic Display 5–12
Console Reported Problems 5–13
show fru 5–15
test 5–16
Mass-Storage Problems Indicated at Power-Up 5–18
EISA Bus Problems Indicated at Power-Up 5–21
Additional EISA Troubleshooting Tips 5–23
PCI Bus Problems Indicated at Power-Up 5–24
Boot Problems 5–25
Operating System Reported Problems 5–26
Fail-Safe Loader 5–27
Fail-Safe Loader Functions 5–28
Activating the Fail-Safe Loader 5–28

6 Removal and Replacement

In This Chapter 6–1
Tools Required 6–2
Front Bezel 6–2
Removal 6–2
Replacement 6–3
Extending the Chassis for Service 6–4
Extending 6–4
Securing 6–5
Operator Control Panel Cover 6–6
Removal 6–6
Replacement 6–7

Operator Control Panel Board 6–8
Removal 6–8
Replacement 6–9
Front Cover 6–10
Removal 6–10
Replacement 6–11
CPU and Memory Modules 6–12
Removal 6–12
Replacement 6–13
Top Cover 6–14
Removal 6–14
Replacement 6–14
Safety Cover 6–16
Removal 6–16
Replacement 6–16
RX23L Floppy Drive 6–18
Removal 6–18
Replacement 6–19
Remote I/O Module 6–20
Removal 6–20
Replacement 6–21
Fan Assembly 6–22
Removal 6–22
Replacement 6–23
Fan Speed-Control Module 6–24
Removal 6–24
Replacement 6–25
Thermal Sensor 6–26
Removal 6–26
Replacement 6–27
RZ28 Hard Disk Drive 6–28
Removal 6–28
Replacement 6–29
Power Supply 6–30
Removal 6–30
Replacement 6–31
System Backplane 6–33
Removal 6–33
Replacement 6–34
I/O Backplane 6–35
Removal 6–35
Replacement 6–36

A Hardware Specifications

In This Appendix A–1
System Specifications A–2
System Dimensions A–2
Electrical Specifications A–2
Environmental Conditions A–3

B Field Replaceable Units

In This Appendix B–1

Index

Examples

3–1 Boot Menu Example 3–9

Figures

1–1 AlphaServer 2100A LP System 1–2
1–2 Front Components 1–6
1–3 Operator Control Panel (OCP) 1–7
1–4 Unlocking the OCP Door 1–10
1–5 Front Internal Components 1–11
1–6 Top Components 1–12
1–7 Rear Components 1–13
2–1 System Clearance and Service Area 2–3
2–2 Power Requirements 2–5
2–3 Attaching the Brackets to the Right Slide Assembly 2–12
2–4 Attaching the Slide Races 2–14
2–5 Installation Area and Mounting Holes 2–16
2–6 Attaching the Slides to the Cabinet Rails 2–17
2–7 Mounting the System on the Slides 2–20
2–8 Aligning the System Slides to the Cabinet Rails 2–21
2–9 Attaching the Power Cord 2–23
2–10 Installing the Interlock Actuator Bracket 2–25
2–11 The Interlock System 2–28
2–12 Installing the Cable Management Brackets 2–30

2–13	Example of Cable Routing	2–32
2–14	Ethernet Network Connections	2–33
2–15	Connecting Serial and Parallel Devices	2–35
2–16	Terminal Connections	2–37
2–17	Installing the Keyboard/Mouse/Video Extension Cables	2–41
2–18	SCSI Expansion and Optional RAID and/or DSSI Ports	2–43
3–1	Powered-Down System Settings	3–3
3–2	Applying Power to the System	3–5
3–3	System Startup Diagnostic Indicators	3–6
3–4	Turning Off the System	3–17
3–5	Turning Off the AC Power	3–18
4–1	Device Name Convention	4–8
4–2	System Bus Option Locations	4–12
4–3	EISA and ISA Boards	4–18
4–4	PCI Board	4–28
4–5	Installing the Removable-Media Device	4–31
4–6	Sliding the Device into Enclosure and Mounting to Front Cover	4–32
4–7	Opening Rear Cover of Enclosure and Connecting Data and Power Cables	4–33
4–8	Installing the Internal DSSI Cable	4–35
5–1	Fail-Safe Loader Jumper (W6) on the Standard I/O Module	5–29
6–1	Removing and Replacing the Front Bezel	6–3
6–2	Extending the Chassis	6–5
6–3	Removing and Replacing the Operator Control Panel Cover	6–7
6–4	Removing and Replacing the Operator Control Panel Board	6–9
6–5	Removing and Replacing the Front Cover	6–11
6–6	Removing and Replacing the CPU and Memory Modules	6–13
6–7	Removing and Replacing the Top Cover	6–15
6–8	Removing and Replacing the Safety Cover	6–17
6–9	Removing and Replacing the RX23L Floppy Drive	6–19
6–10	Removing and Replacing the Remote I/O Module	6–21
6–11	Removing and Replacing the Fan Assembly	6–23
6–12	Removing and Replacing the Fan Speed-Control Module	6–25
6–13	Removing and Replacing the Thermal Sensor	6–27

6–14 Removing and Replacing the RZ28 Hard Disk Drive 6–29
6–15 Removing and Replacing the Power Supply 6–32
6–16 Removing and Replacing the System Backplane 6–34
6–17 Removing and Replacing the I/O Backplane 6–37

Tables

1–1 System Characteristics 1–3
2–1 Power Cord Order Numbers 2–6
2–2 Accessory Kit Contents (PN: 70-32770-01) 2–9
4–1 Summary of Procedure for Configuring EISA Bus (EISA Options Only) 4–24
4–2 Summary of Procedure for Configuring EISA Bus with ISA Options 4–25
5–1 How to Identify a Problem 5–3
5–2 Identifying and Resolving Problems 5–4
5–3 Problem Reference 5–5
5–4 Digital Support Centers 5–7
5–5 Diagnostic Flow for Power Problems 5–10
5–6 Diagnostic Flow for Problems Getting to Console Mode 5–11
5–7 Interpreting the OCP Power-Up/Diagnostic Display 5–12
5–8 Diagnostic Flow for Problems Reported by the Console Program 5–13
5–9 Fixed-Media Mass-Storage Problems 5–19
5–10 Removable-Media Mass-Storage Problems 5–20
5–11 EISA Troubleshooting 5–22
5–12 PCI Troubleshooting 5–24
5–13 Diagnostic Flow for Boot Problems 5–25
5–14 Diagnostic Flow for Errors Reported by the Operating System 5–26
A–1 System Dimensions A–2
A–2 System Electrical Specifications A–2
A–3 System Environmental Conditions A–3
B–1 AlphaServer 2100A Low-Profile System Chassis FRUs B–1

Preface

Purpose of This Guide

This guide describes how to install, operate, troubleshoot, and maintain the AlphaServer 2100A low-profile system.

This guide also describes the associated options and upgrades.

Who Should Use This Guide

This guide is for Digital service personnel or qualified self-maintenance customers who are familiar with installing computer systems, and for system managers and others who perform system management tasks.

Structure of This Guide

This guide is organized in the following manner:

- **Chapter 1 —** Introduces the system and describes the basic components and controls.
- **Chapter 2 —** Describes how to install the system.
- **Chapter 3 —** Describes the setup and basic operation of the system.
- **Chapter 4 —** Describes the associated options and upgrades.
- **Chapter 5 —** Explains how to identify and resolve system problems that prevent proper operation.
- **Chapter 6 —** Describes the removal and replacement procedures for the major system components.
- **Appendix A —** Provides the system hardware specifications.
- **Appendix B —** Lists all FRUs and their part numbers for the AlphaServer 2100A low-profile system chassis.

Related Documents

Other documents related to the AlphaServer 2100A low-profile system include the following:

- *AlphaServer 2000/2100/2100A Firmware Reference Guide* (EK-AXPFW-RM)
- *AlphaServer 2100 Windows NT Release Notes* (EK-WNTFS-IN)
- *Alpha Systems DSSI VMScluster Installation and Troubleshooting* (EK-D4AXP-TS)
- *OpenVMS Alpha System Dump Analyzer Utility Manual* (AA-PV6UB-TE)
- *Guide to Kernel Debugging* (AA-PS2TA-TE)
- *DEC Verifier and Exerciser Tool User's Guide* (AA-PTTMA-TE)

Conventions Used in This Guide

This guide uses the following conventions:

Convention	Meaning
Note	A note calls the reader's attention to any item of information that may be of special importance.
Caution	A caution contains information essential to avoid damage to the equipment.
Warning	A warning contains information essential to the safety of personnel.
❶	Circled numbers provide a link between figures and text.
`MONOSPACE`	Text displayed on the screen is shown in monospace type.
bold type	Bold type denotes user input.
italic type	Italic type emphasizes important information, indicates variables, and indicates complete titles of manuals.
n.nn	A period in numerals signals the decimal point indicator. For example, *1.75* equals *one and three-fourths*.
Ctrl/*x*	Ctrl/*x* indicates that you hold down the Ctrl key while you press another key or mouse button (indicated here by *x*).
Return	Specific keys such as the Return key are represented in boxes.
x	A lowercase italic *x* indicates the generic use of a letter. For example, *xxx* indicates any combination of three alphabetic characters.
n	A lowercase italic *n* indicates the generic use of a number. For example, 19*nn* indicates a 4-digit number in which the last 2 digits are unknown.
[ ]	In format descriptions, brackets indicate optional elements. You can choose none, one or more, or all of the options.

Safety Symbols

The following symbols appear on the system. Please review their definitions below:

This Attention symbol is used to alert readers about specific safety conditions. When this symbol appears on equipment, the user should read separate instructional material related to the particular safety condition being addressd.

Warning: CPU and Memory modules have parts that operate at high temperatures. Wait two minutes after power is removed before handling these modules.

Warning: This area contains electrical energy. Disconnect the ac power cord(s) to the system before accessing this area.

Warning: High voltage shock hazard present inside the power supply.

1
Introduction

In This Chapter

This chapter introduces the AlphaServer 2100A low-profile system and describes the system components and controls.

The AlphaServer 2100A LP System

The AlphaServer 2100A low-profile system (refer to Figure 1–1) is a high-performance superserver for multiuser environments. The system is contained in a slide-mounted chassis that fits into a standard 48.26-cm (19-in.) EIA cabinet. The system complies with the Electronic Industries Association (EIA) standard 310C and the International Electrotechnical Commission (IEC) 297 standards that enable installation into a cabinet with rails with the English RETMA (Radio Electronics Television Manufacturers Association) rail-hole pattern.

The AlphaServer 2100A low-profile system is part of the AlphaServer 2100 product line. This product line is a family of Alpha, symmetric multiprocessor, server systems that are supported by multiple operating systems (Digital UNIX, OpenVMS, and Windows NT). These server systems are suitable for several computing environments: general-purpose commercial, high-performance application and database, and PC LAN server.

The server's CPU is based on the DECchip 21164 processor chip running at 250 MHz or 291 MHz.

Figure 1–1 AlphaServer 2100A LP System

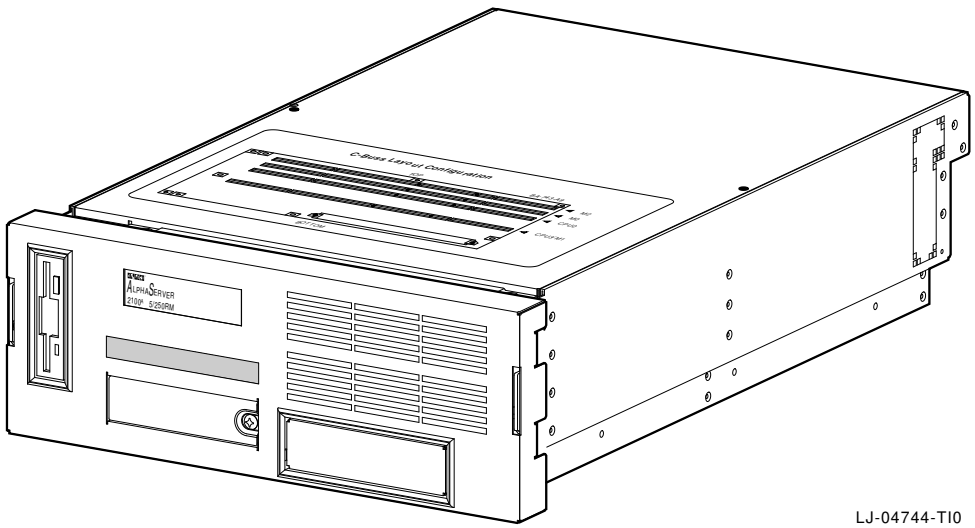

Characteristics

Table 1–1 highlights the specific characteristics of the AlphaServer 2100A low-profile system.

Table 1–1 System Characteristics

Characteristic	Description
Two–processor capability	May be configured as a uniprocessor or as a dual processor.
High-performance PCI I/O subsystem	Peripheral Component Interconnect (PCI) is the emerging industry-standard bus that supports Digital and third-party options. The current implementation of PCI on the server has a peak bandwidth of 132 MB/s. The server has two PCI buses for a total bandwidth of 264 MB/s.
EISA I/O bus	33 MB/s EISA I/O bus supports industry-standard EISA options, such as: Network adapters Video/audio options Storage adapters
Internal mass storage	One RZ28 hard disk drive storage device is standard in the system, and contains up to 2 GB of storage space.
External storage devices	Supports external StorageWorks compatible storage devices for low-cost, high-capacity, flexible configurations. This provides the ability to have many independent disks that may be configured in stripe sets, shadow sets, or RAID sets to optimize performance according to customer requirements.
High availability	Supports disk hot swap in external StorageWorks shelves as well as clustering with proper software and controllers.
CPU chip technology	The DECchip 21164 is manufactured by using Digital's state-of-the-art CMOS process.
CPU clock rates	250 MHz and 291 MHz for DECchip 21164
CPU chip design features	Superscalar, superpipelined

(continued on next page)

Table 1–1 (Cont.) System Characteristics

Characteristic	Description
System bus bandwidth	667 MB/s (128-bit, 24-ns cycle)
Memory	Up to 1.5 GB of main memory

Components and Controls

Location of the Controls and Components

System components and controls are located at the front, top, and rear of the system.

Components: Front of System

Figure 1–2 shows the components on the front of the system.

Figure 1–2 Front Components

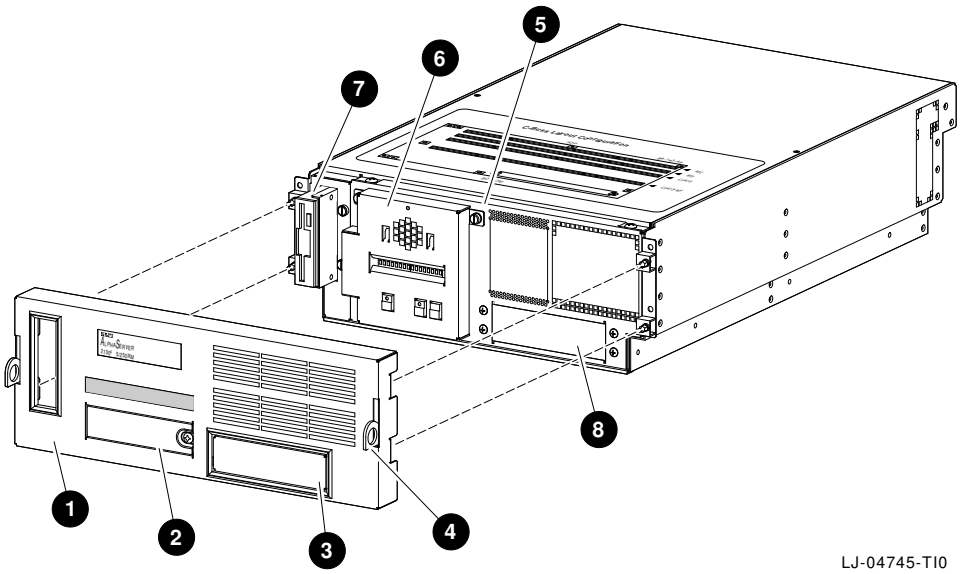

❶ Front bezel
❷ OCP door
❸ Metal insert for optional 5.25-inch removable-media storage device opening
❹ Front bezel pull loops
❺ Front cover
❻ Operator control panel (OCP)
❼ RX23L floppy drive
❽ Space for optional 5.25-inch removable-media storage device

Operator Control Panel (OCP)

The operator control panel (OCP), shown in Figure 1–3, is located on the front of the system. It contains a diagnostic display and buttons that allow the user to power, halt, and reset the system.

Figure 1–3 Operator Control Panel (OCP)

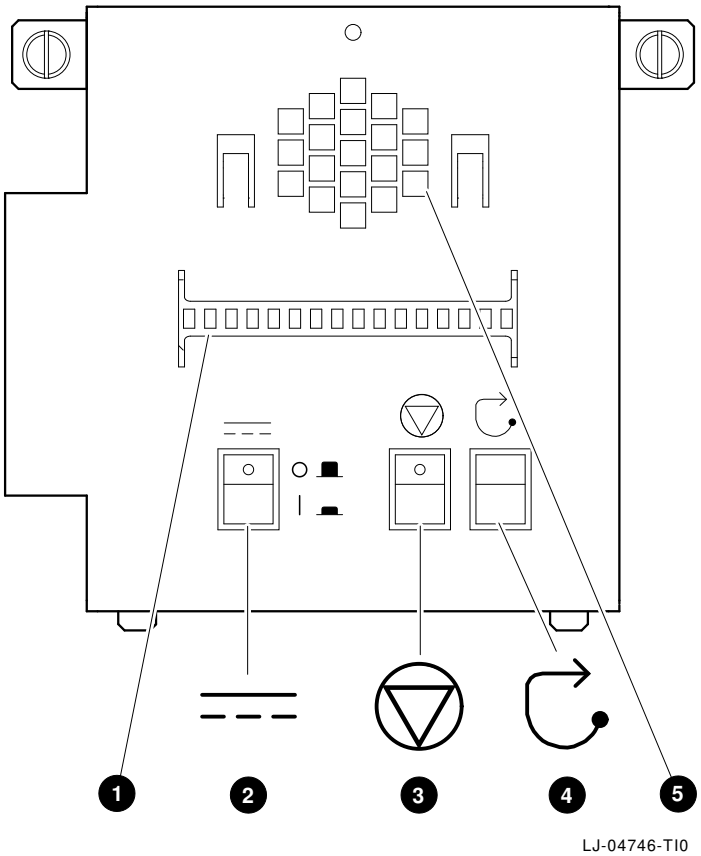

❶ Power-up/diagnostic display
❷ DC On/Off button
❸ Halt button (Digital UNIX and OpenVMS systems only)
❹ Reset button
❺ Speaker

❶ Power-Up/Diagnostic Display

The power-up/diagnostic display shows system status messages during the power-up and diagnostics sequence. Use the display to check the results of system self-tests.

For information about interpreting specific messages, refer to the Interpreting the OCP Power-Up/Diagnostic Display section in Chapter 5.

❷ DC On/Off

The DC On/Off button controls the flow of dc power to the system. Use the DC On/Off button and the ac power cord to apply and disconnect power to the system. The DC On/Off light, located on the DC On/Off button, is lit whenever dc power is present.

❸ Halt (Digital UNIX and OpenVMS systems only)

The Halt light, located on the Halt button, comes on briefly during the system self-tests. Thereafter, the Halt light comes on and remains lit whenever dc power is present and the Halt button is in the *in* position.

Invoking Console Mode: Pressing the Halt button invokes console mode when Digital UNIX and OpenVMS are running. Pressing the Halt button has no effect when Windows NT is running.

Caution

Pressing the Halt button interrupts your operating system session. Before pressing the Halt button, shut down the operating system according to the operating system shutdown procedure described in your operating system documentation.

Returning to Operating System Mode: To return to operating system mode, press the Halt button to the *out* position and reboot the operating system.

Note

If the Halt button is pressed by mistake and few or no console commands have been entered, it may be possible to resume your operating system session by entering the `continue` command.

Before Power-Up: Pressing the Halt button before turning the system on prevents the system from booting the operating system. Instead, the system will remain in console mode. To boot the operating system and continue system operation, press the Halt button to the *out* position.

❹ **Reset**

Pressing the Reset button resets the system. The system aborts all current processes, initializes, and then performs startup self-tests. Use the Reset button to reset the system if it hangs, or to initialize the system if you have changed system settings.

Caution

Pressing the Reset button halts all system processes. *Do not* press the Reset button while the operating system is running unless your system is hung and all other ways of terminating the process have been exhausted.

OCP Door

After the system is installed in a cabinet, the OCP door allows access to the OCP controls without removing the front bezel. To open the OCP door, unlock the door ❶ and pull the upper-right edge ❷ of the door away from the system as shown in Figure 1–4.

Figure 1–4 Unlocking the OCP Door

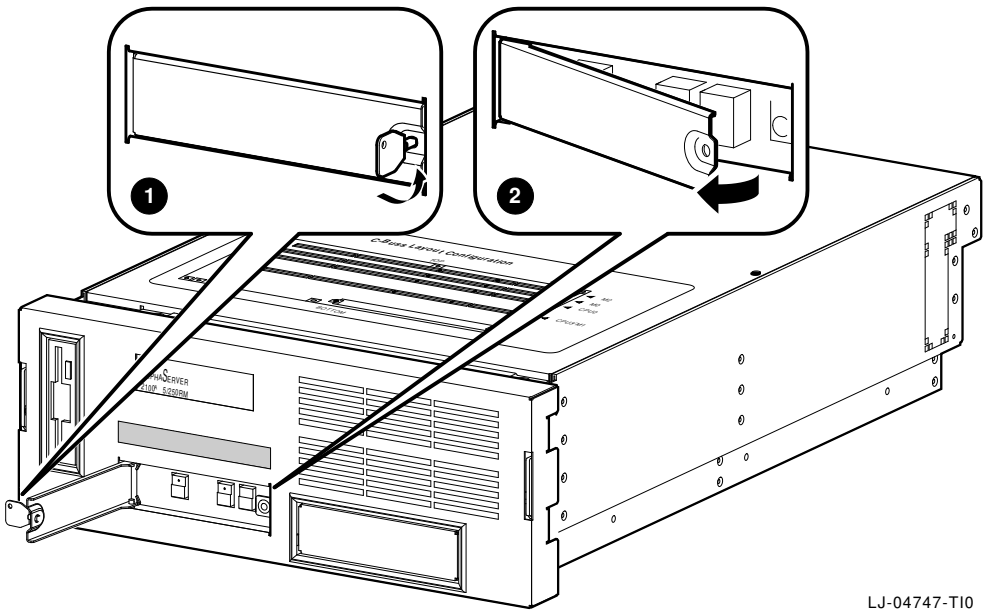

Components: Front Internal

Figure 1–5 shows the CPU and memory module card-cage area that is located behind the front cover.

Warning: CPU and memory modules have parts that operate at high temperatures. Wait two minutes *after* power is removed before handling these modules.

Figure 1–5 Front Internal Components

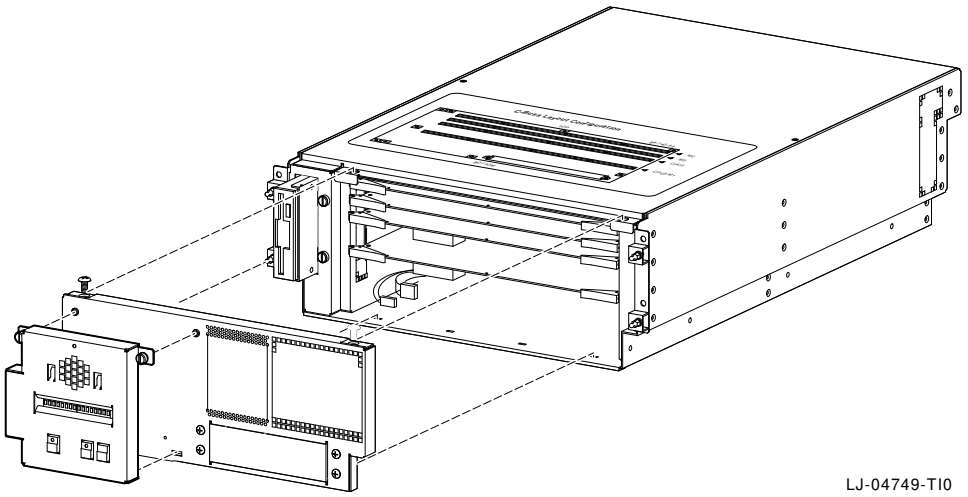

Components: Top of System

Figure 1–6 shows the location of the top cover to the area containing the PCI and EISA interface boards, the fan, the fan speed-control module, the power supply, the remote I/O module, and the RZ28 hard disk drive.

Figure 1–6 Top Components

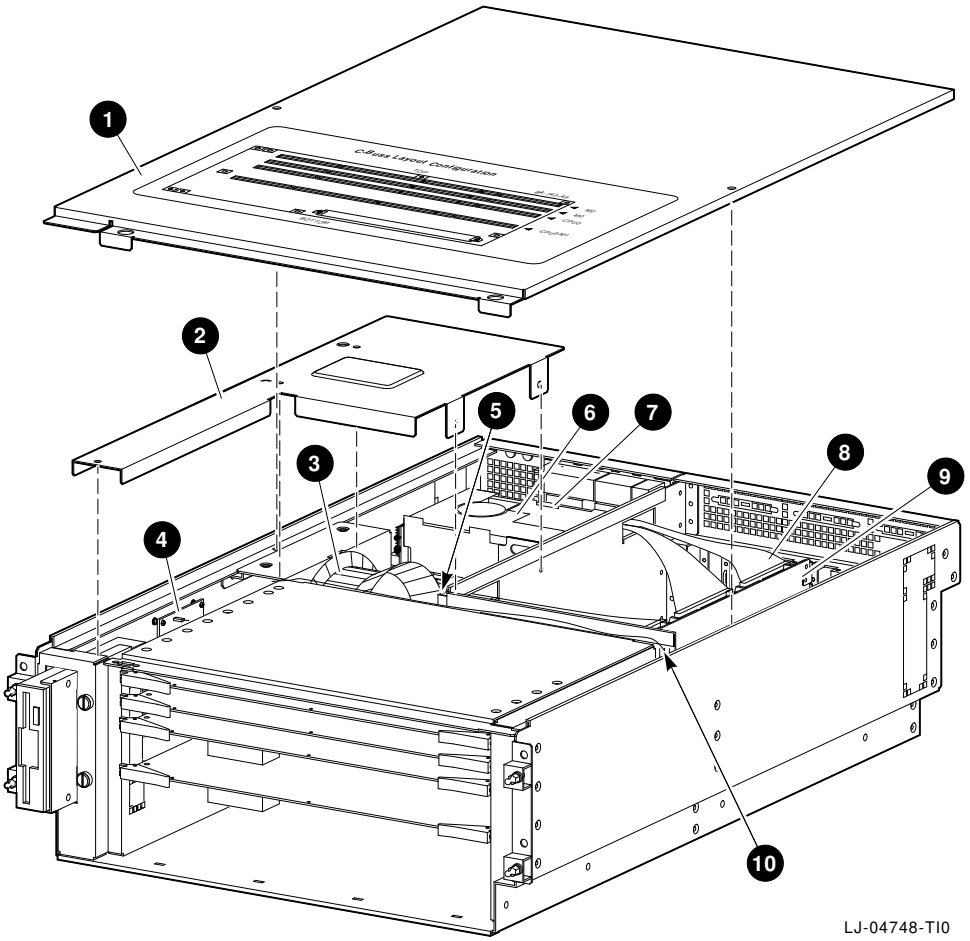

❶ Top cover
❷ Safety cover
❸ Fan
❹ Fan speed-control module
❺ Power supply
❻ RZ28 hard disk drive
❼ Remote I/O module
❽ PCI/EISA interface card cage
❾ Standard I/O card
❿ Thermal sensor

Components: Rear of System

Figure 1–7 shows the major components at the rear of the system.

Figure 1–7 Rear Components

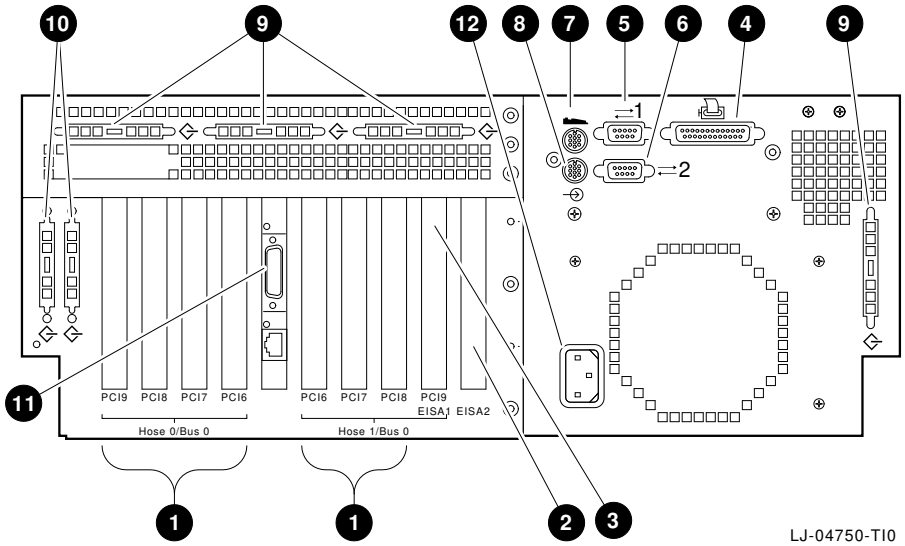

❶ PCI board slots
❷ EISA board slot
❸ PCI/EISA board slot
❹ Parallel port
❺ Serial port (COM1)
❻ Serial port (COM2)
❼ Keyboard port
❽ Mouse port
❾ SCSI-3 port knockouts
❿ SCSI-2/DSSI port knockouts
⓫ Standard I/O card
⓬ AC input receptacle

2
Installation

In This Chapter

This chapter covers the following topics:

- Verifying the Site Preparation
- Tools Required
- Unpacking the Shipment
- Installing the System Slides
- Mounting the System on the Slides
- Using the Interlock System
- Installing the Cable Management System
- Connecting to Networks
- Connecting Peripherals

Before Installing the System

Warning

Only a qualified service person should install the system. A qualified service person is an individual who has the technical training and experience necessary to be aware of the:

- Hazards to which they are exposed in performing a task
- Measures to minimize the danger to themselves or other persons.

A qualified service person need not be a Digital service representative.

Verifying the Site Preparation

Overview

The installation instructions that follow assume that:

- All cables that you plan to connect to your system are in place and clearly labeled. These cables are:

  Terminal data cables
  Telephone cables
  Network cables

- The specifications and conditions listed in Appendix A have been met.
- The system is located in an area that provides sufficient clearance for ventilation and servicing. Figure 2–1 shows the recommended clearance for the system.

Caution

Do not impede airflow by obstructing the front and rear of the unit. Exceeding internal thermal limits can affect system reliability/availability.

Warning

The AlphaServer 2100A low-profile system can weigh up to 34.02 kg (75.0 lb). To prevent personal injury and equipment damage, ensure that the system is contained in an enclosure that can be stabilized when the system is pulled out on its slides.

Figure 2–1 System Clearance and Service Area

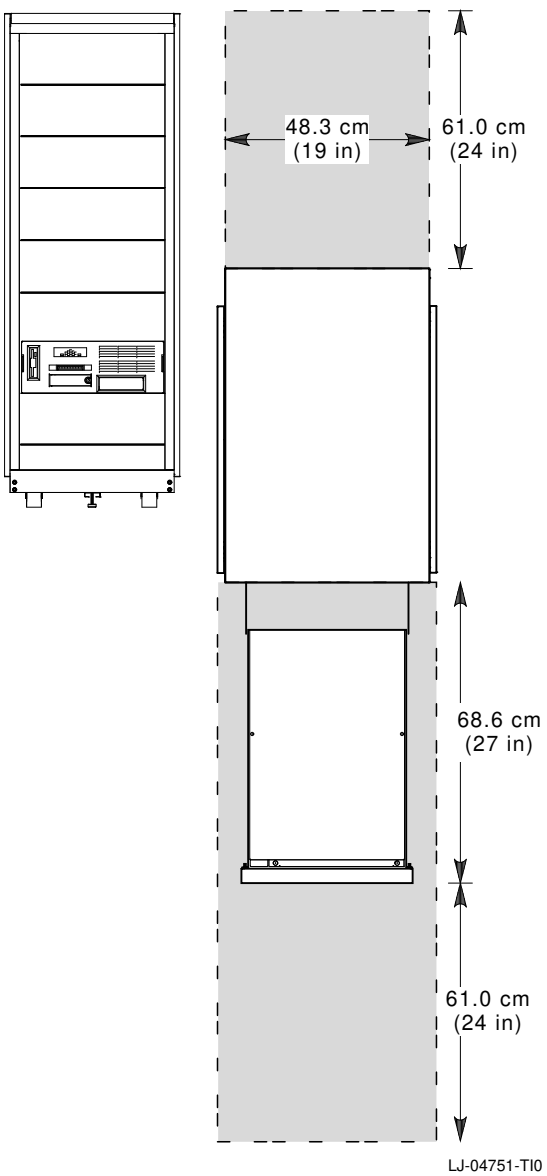

Power Requirements

Your system has one power supply. Figure 2–2 shows the power requirements for the power supply.

Voltage selection is not required. This equipment is intended for use at all rated ac-input voltages.

Warning: High voltage shock hazard present inside the power supply.

Figure 2–2 Power Requirements

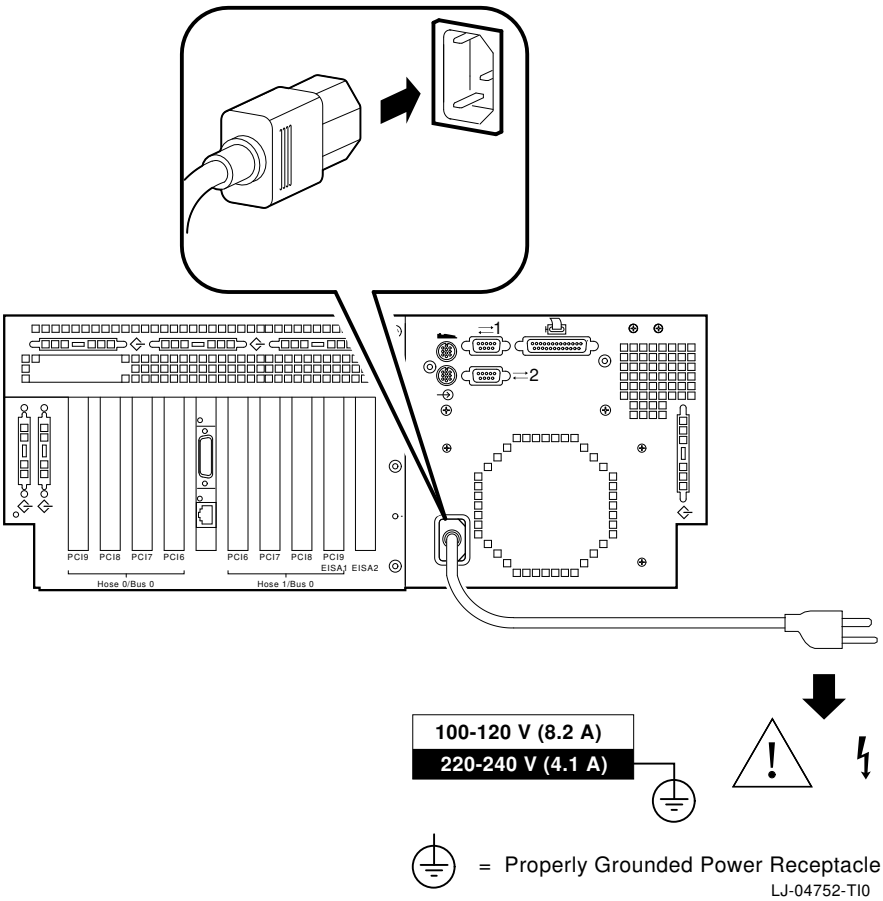

Power Cords

Power cords for the AlphaServer 2100A low-profile system are country-specific. The system is shipped with two U.S. power cords [PN: 17-00083-49 (120 V) and PN: 17-00083-50 (240 V)].

For a list of the available power cords and their appropriate part numbers, refer to Table 2–1 and note the following:

- If a customer, use the Power Cord BN Number to identify the power cord that you need.
- If a Digital service representative, use the Digital Number to identify the power cord that you need.

Note

One power cord is needed for the power supply in your system.

Table 2–1 Power Cord Order Numbers

Country	Power Cord BN Number	Digital Number
U.S., Japan, Canada [1]	—	17-00083-49 17-00083-50
Australia, New Zealand	BN19J-2E	17-00198-13
Central European (Aus, Bel, Fra, Ger, Fin, Hol, Nor, Swe, Por, Spa)	BN19D-2E	17-00199-22
U.K., Ireland	BN19B-2E	17-00209-12
Switzerland	BN04B-2E	17-00210-12
Denmark	BN19L-2E	17-00310-06
Italy	BN19N-2E	17-00364-17
India, South Africa	BN19T-2E	17-00456-15
Israel	BN19Y-2E	17-00457-15

[1]These power cords are included with the system.

Tools Required

The tools required to install the rackmount system are:

- Scissors
- Flat-blade screwdriver
- Phillips-head screwdriver
- Adjustable wrench

Unpacking the Shipment

Checking the Shipment

Note

Save all packing materials in case you need to return the system for service or to reship the system.

Check the packing list to ensure that all items listed have been received. If any item is missing or damaged, contact your delivery agent immediately and notify your Digital sales representative.

Your shipment may include several cartons. One carton contains the system, hardware documentation, software documentation, system software, diagnostic software, and software licenses.

Depending on your order, your shipment may also include some of the following components:

- Terminals
- Printers
- Modems
- Options

Warning

The AlphaServer 2100A low-profile system can weigh up to 34.02 kg (75.0 lb). Use sufficient personnel and the proper equipment to remove the system from the shipping carton.

Accessories

Table 2–2 lists the mounting hardware included with the system for installation in a standard 48.26-cm (19-in.) EIA cabinet.

Table 2–2 Accessory Kit Contents (PN: 70-32770-01)

Description	Part Number	Quantity
Rubber grommet	12-31734-01	4
Ethernet loopback connector	12-22196-02	1
Serial line adapter	H8571-J	1
Power cord, term 3-14 SJT 120 V	17-00083-49	1
Power cord, term 18-3 SJT 240 V	17-00083-50	1
Chassis slide assembly	12-46462-01	1 pair
Cable management bracket (cabinet)	74-50691-01	1
Cable management bracket (system)	74-51123-01	1
Interlock actuator bracket	74-48999-17	1
Stabilizer bracket	74-48996-01	1
Actuator latch	74-48997-02	1
Stabilizer bracket nut plate	74-48998-01	1
Screw, 10-32 truss-head	90-00063-37	2
Set screw, 6-32	90-06291-10	2
Screw, 10-32 truss-head	90-00063-39	20
Cable tie, 1.25-inch diameter	90-07031-01	10
U-nut, 10-32 x 0.615L	90-07786-00	8
Key	90-11194-01	2
Kepnut, M4 x 7 mm	90-40203-02	4
Pan-head screw, M4 x 8 mm	90-09984-19	2
Pan-head screw, M3 x 6 mm	90-09984-20	4
Laminate	99-08213-01	1
Rubber bumper	12-09750-02	4
Push-pin jumpers	12-14314-00	3

(continued on next page)

Table 2–2 (Cont.) Accessory Kit Contents (PN: 70-32770-01)

Description	Part Number	Quantity
Removable-media enclosure	70-32896-01	1
RZ28 hard disk drive top drive mounting bracket	74-51331-01	1
Keyboard/Mouse/Video extension cable kit	2T-450KM-AA	1
AlphaServer 2100A LP System Installation/Owner's/Service Guide	EK-21ALP-IN	1
AlphaServer 2100A Customer Kit	QZ-00TAA-GC	1

Installing the System on the Slides

Overview

The AlphaServer 2100A low-profile system is shipped with one pair of slide assemblies (PN: 12-46462-01), which include:

- Four brackets for standard 48.26-cm (19-in.) EIA cabinet installation
- Pair of slide assemblies
- Attaching hardware

Installing the system on the slides involves the following major steps:

1. Preparing the slides
2. Attaching the slide races
3. Attaching the slides to the cabinet rails
4. Mounting the system on the slides

Tools Required

A Phillips-head screwdriver and a small adjustable wrench are needed to install the rackmount system.

Preparing the Slides

Refer to Figure 2–3 and prepare the slides as follows:

Caution

To avoid damaging the slides, it is important that the installation be performed as instructed in the following procedure.

1. Find the slide assembly ❶ for the right-hand side that is shipped with the system.
2. Pull out the inside race ❷ until it locks. *Do not* remove the race from the slide assembly at this time.

3. Slide a *long* mounting bracket ❸ onto the rear end of the slide assembly ❶.

Figure 2–3 Attaching the Brackets to the Right Slide Assembly

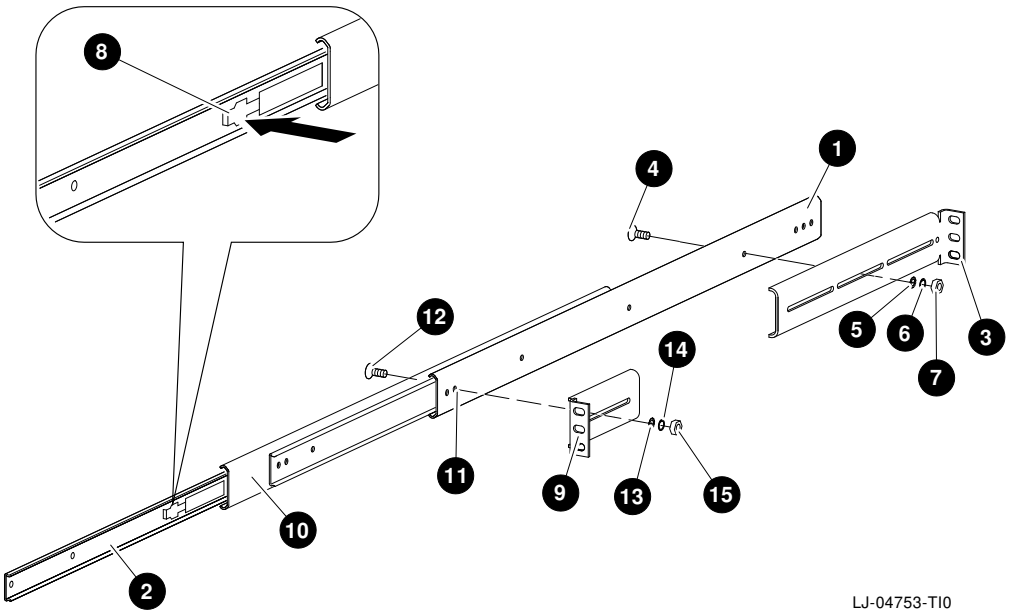

4. Attach the rear mounting bracket ❸ to the slide assembly ❶ using the mounting hole shown in Figure 2–3 and one 8-32 screw ❹, flat washer ❺, lock washer ❻, and nut ❼, but do not tighten. The mounting bracket must be loose enough to adjust later.
5. Press in on the locking lever ❽, and pull the race ❷ out of the slide assembly ❶.
6. Slide a *short* mounting bracket ❾ onto the front end of the slide assembly ❶.

7. To fasten the front mounting bracket to the slide assembly, proceed as follows:

   a. Pull out the inside slide ❿ about halfway, enough to align one half-inch access hole on the inside slide with the mounting hole ⓫ on the slide assembly ❶ and the front mounting bracket ❾. The hole on the slide assembly aligns with the hole on the mounting bracket as shown in Figure 2–3.

   b. Attach the front mounting bracket ❾ to the slide assembly ❶ using one 8-32 screw ⓬, flat washer ⓭, lock washer ⓮, and nut ⓯. Tighten the screw.

   c. Slide the race ❷ back into the slide assembly and set this assembly aside.

8. Find the slide assembly for the left-hand side that is shipped with the system.

Caution

To avoid damaging the slides, it is important that the installation be performed as instructed in the procedure previously outlined in steps 2 through 7.

9. Attach the rear and front mounting brackets (following steps 2 through 7) using a *long* mounting bracket for the rear end of the slide assembly and a *short* mounting bracket for the front end of the slide assembly.

Reminder

Figure 2–3 shows how to attach the front and rear mounting brackets to a right slide assembly. Use this figure as a reference only when assembling the left slide assembly.

Attaching the Slide Races

To attach the slide races, refer to Figure 2–4 and proceed as follows:

1. Remove the race from the right slide assembly.
2. Attach the right slide race to the right side of the system chassis (as viewed from the front) using four pan-head screws.
3. Remove the race from the left slide assembly.
4. Attach the left slide race to the left side of the system chassis (as viewed from the front) using four pan-head screws.

Figure 2–4 Attaching the Slide Races

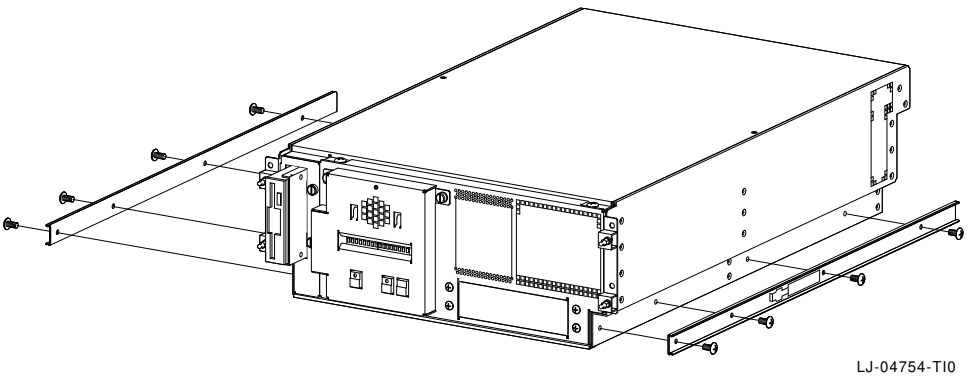

Cabinet Stability

Warning

To ensure cabinet stability, Digital does not recommend installing the system in the top area of the cabinet.

Cabinet Rail-Hole Pattern

In a standard 48.26-cm (19-in.) EIA cabinet, the holes in the cabinet rails follow a pattern of 1.27 cm (0.50 in.), 1.59 cm (0.625 in.), and 1.59 cm (0.625 in.). This pattern is repeated for the length of the cabinet rails.

Determining the Installation Area

To determine the installation area, perform the following steps at the front and rear cabinet rails (refer to Figure 2–5).

Step	Action
1	Select a section of the cabinet rail where there is a 1.27 cm (0.50 in.) space between two holes.
2	Make a mark between the holes. This is the starting point of the installation area.
3	Count up or down three holes. This is one *set* and equals 4.45 cm (1.75 in.).
4	Count up or down four sets and make a mark. The area between the marks is the *installation area*.

The total installation area is 17.8 cm (7.0 in.). The equation for calculating the total installation area is:

4.45 cm (1.75 in.) $\times$ 4 sets = 17.8 cm (7.0 in.)

Note

The hole count described in this section determines the system installation location in any 17.8-cm (7-in.) area of the cabinet.

Figure 2–5 Installation Area and Mounting Holes

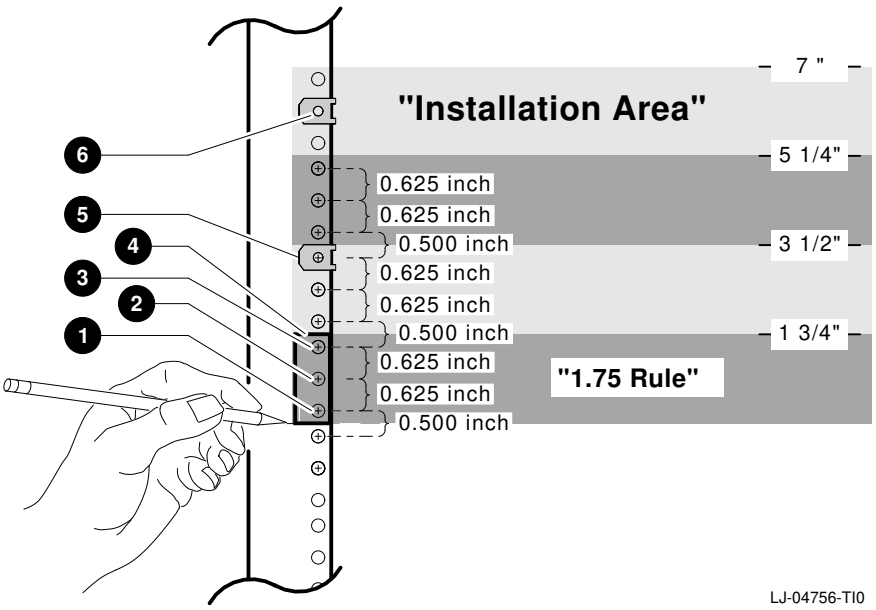

❶ Hole 1 for attaching slide bracket
❷ Hole 2 for attaching slide bracket
❸ Hole 3 for attaching slide bracket
❹ Bar nut (placed behind rail [front and back rails])
❺ Hole 6 for U-nut used to secure system to front rails
❻ Hole 11 for U-nut used to secure system to front rails

Attaching the Slides to the Cabinet Rails

To attach the slides to the cabinet rails, refer to Figure 2–6 and proceed as follows:

1. Locate the right slide assembly. Attach the right slide assembly ❶ to the right front cabinet rail ❷ (facing the front of the cabinet) using three 10-32 truss-head screws ❸ and a bar nut ❹. Do not tighten the screws at this time.
2. Attach the right slide assembly ❶ to the right rear cabinet rail ❺ using three 10-32 truss-head screws ❻ and a bar nut ❼. Do not tighten the screws at this time.
3. Tighten the 8-32 screw attaching the rear mounting bracket to the right slide assembly (shown in Figure 2–3).
4. Repeat steps 1 through 3 to attach the left slide assembly to the left cabinet rails.
5. Tighten the screws on the front and rear cabinet rails only enough to allow play for the slides to self-align when the system is installed.

Figure 2–6 Attaching the Slides to the Cabinet Rails

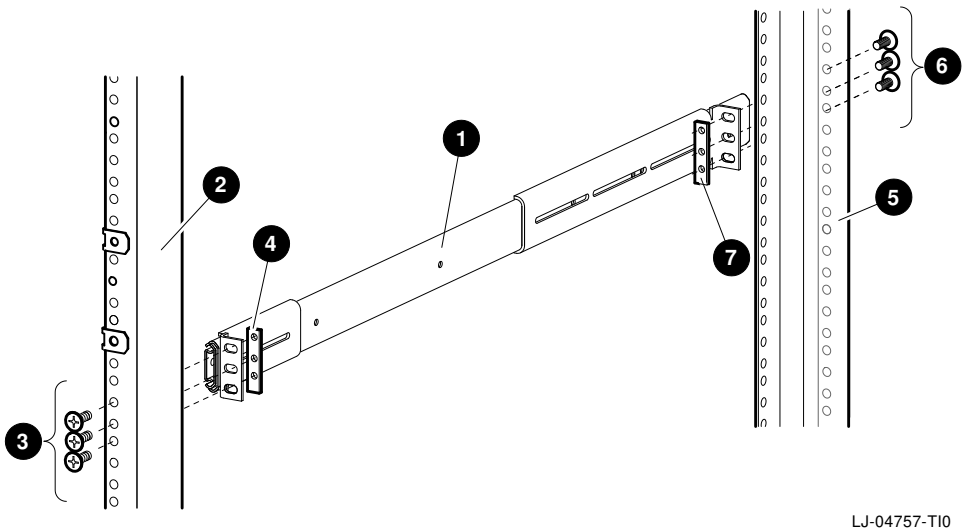

LJ-04757-TI0

Installing the U-Nuts

Four U-nuts must be installed on the cabinet rails to receive the screws that secure the system to the rails. To install the U-nuts, proceed as follows:

1. Locate the 6th and 11th holes on the front rails in the installation area (refer to Figure 2–5).
2. Install a U-nut over each mounting hole identified in step 1 by sliding the U-nut over the edge of the cabinet rail and aligning it with the hole. Ensure that the threaded half of the U-nuts are toward the inside of the cabinet.

Mounting the System on the Slides

To mount the system on the slides, refer to Figure 2–7 and proceed as follows:

Warning

The fully-loaded AlphaServer 2100A low-profile system can weigh up to 34.02 kg (75 lb). Use sufficient personnel and the proper equipment when lifting or moving the system.

Stabilize the cabinet before installing the system into the cabinet. Figure 2–7 shows an example of a cabinet with the stabilizer foot ❶ extended.

1. Pull both equipment slides ❷ out fully to their locked positions.
2. Lift the chassis and position it so that the slide races ❸ fit into the front end of the slides.
3. Push the system into the slides until it stops. Push in on the two locking levers ❹, and then push the system into the cabinet.

Installing the System on the Slides

Figure 2–7 Mounting the System on the Slides

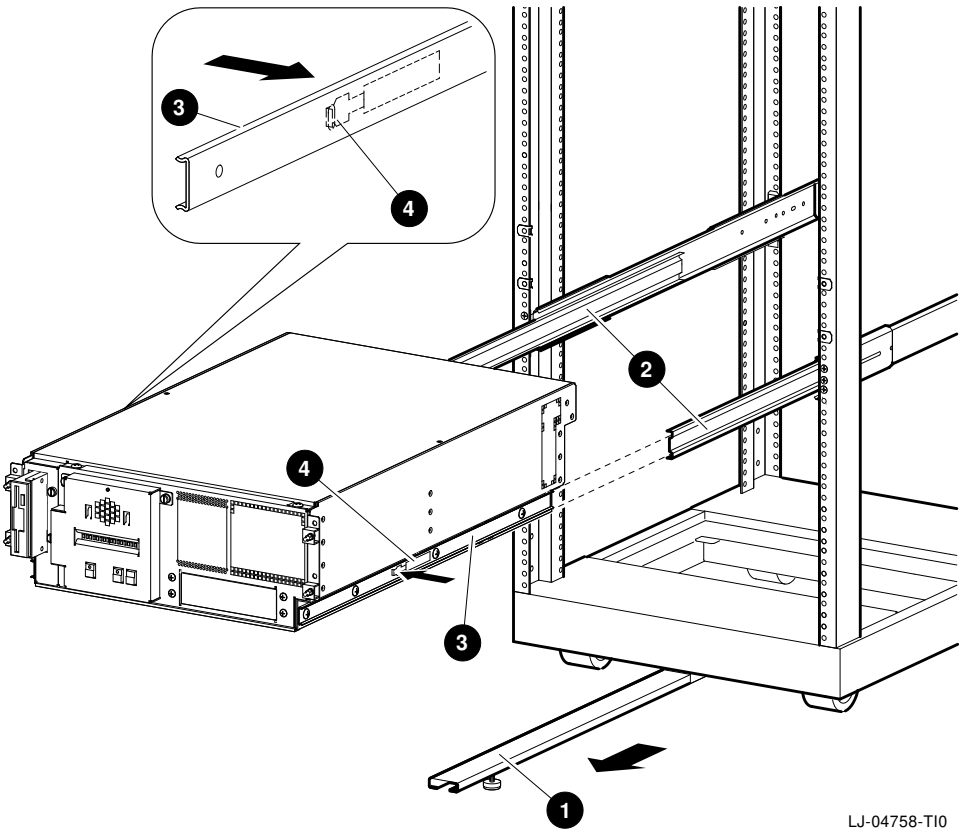

Aligning the System Slides to the Cabinet Rails

To align the system slides to the cabinet rails and ensure smooth operation in and out of the cabinet, refer to Figure 2–8 and proceed as follows:

1. Pull up on the front of the system and secure the system to the front cabinet rails using four 10-32 truss-head screws. The screws go through the system brackets and into the four U-nuts previously installed on the cabinet rails (refer to Figure 2–5).
2. Securely tighten all twelve screws fastening the slides to the cabinet rails. These were installed earlier in the Attaching the Slides to the Cabinet Rails section (refer to Figure 2–6).

Figure 2–8 Aligning the System Slides to the Cabinet Rails

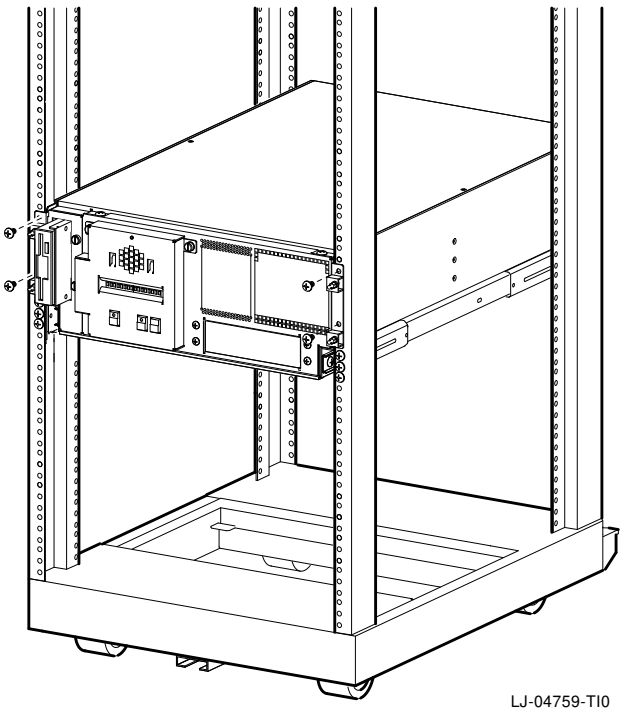

Attaching the Power Cord

To install the power cord, refer to Figure 2–9 and attach the power cord to the ac input receptacle on the rear of the system.

Note

At this time, leave the other end of the power cord disconnected from the cabinet power distribution unit. This connection serves as an ac power switch.

Figure 2–9 Attaching the Power Cord

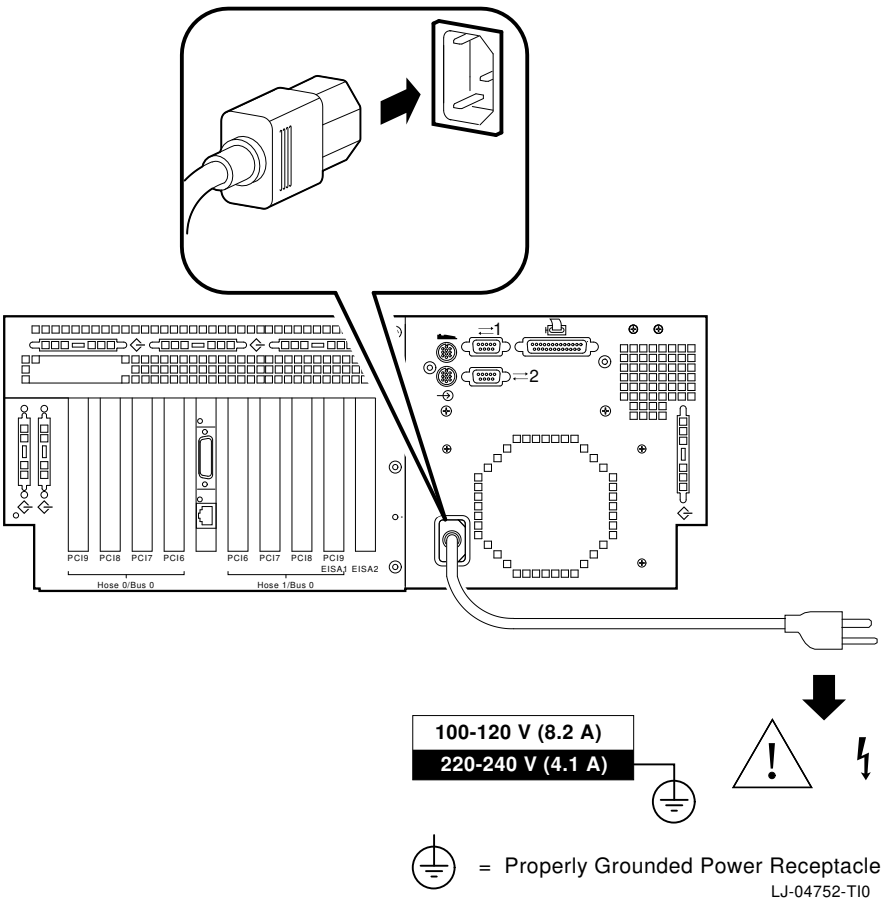

Using the Interlock System

The interlock system helps prevent cabinet instability by allowing only one system at a time to be pulled out of the cabinet.

The interlock system consists of a vertical bar on which are mounted actuator latches for each product installed in the cabinet. These actuator latches engage the interlock actuator bracket on the rear of rackmount systems. When a rackmount system is pulled out of the cabinet, the actuator latches rotate to prevent any other rackmounted system that has an interlock actuator bracket from being pulled out of the cabinet.

Installing the Interlock Actuator Bracket

The interlock actuator bracket helps to prevent cabinet instability by allowing only one system at a time to be pulled out of the cabinet. Install the interlock actuator bracket if the system cabinet has an interlock system.

Note

In some cabinets the interlock bar in the cabinet may not engage the interlock actuator bracket properly. In these cases, do not install the interlock actuator bracket.

Warning

If the system is installed in a cabinet without an interlock bar or the bar is not compatible with the system interlock actuator bracket, it is the customer's responsibility to provide a stable cabinet.

Figure 2–10 shows how to mount the interlock actuator bracket. Mount the interlock actuator bracket ❶ at the rear of the system using two M4 x 8 mm pan-head screws ❷.

Figure 2–10 Installing the Interlock Actuator Bracket

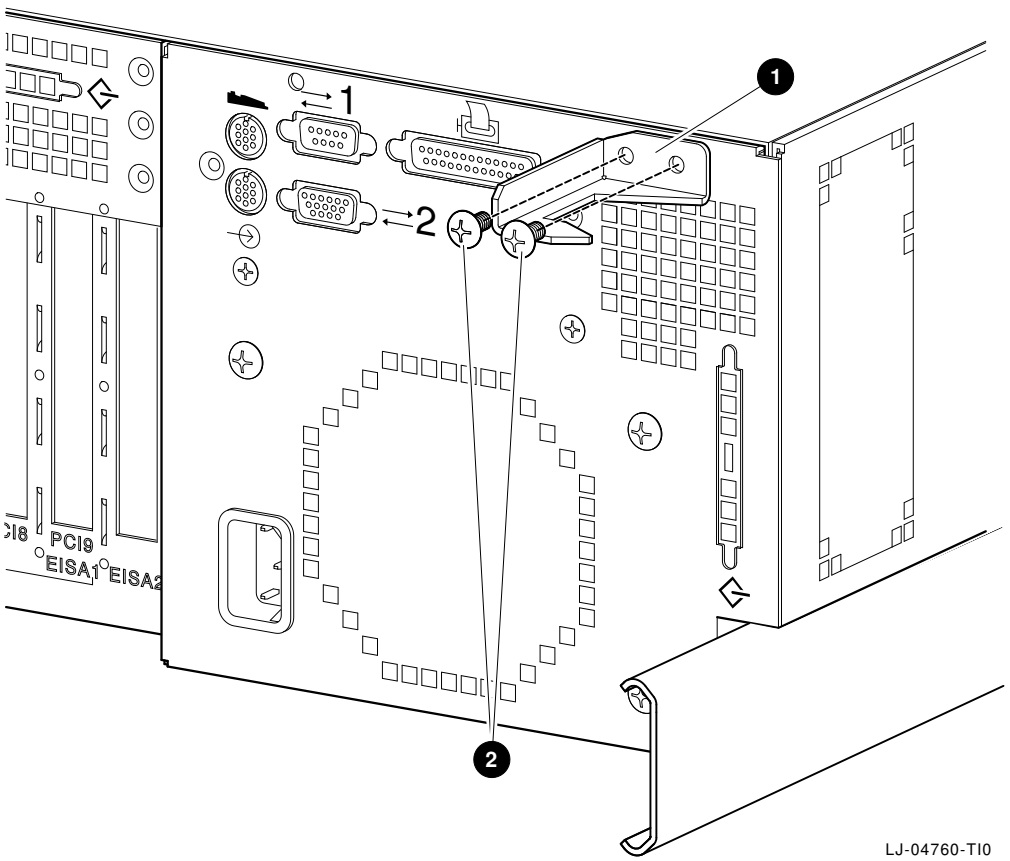

Installing the Interlock Actuator Latches

If additional products are installed into the cabinet, actuator latches for those products should be installed. To install actuator latches, refer to Figure 2–11 and proceed as follows:

1. Remove the screws securing the bottom mounting bracket to the cabinet ❹.
2. Slide the mounting bracket off the bottom of the vertical bar ❶.
3. Slide the stabilizer bracket ❺ for the new product onto the bottom of the vertical bar.
4. Slide the actuator latch ❷ for the new product onto the bottom of the vertical bar.
5. Replace the bottom mounting bracket ❹ and install the screws removed in step 1 but *do not* tighten them.
6. Position the stabilizer bracket so that the bottom hole in the stabilizer bracket ❻ aligns with the RETMA rail hole adjacent to the top of the installed product. This may require the loosening and sliding of other latches and stabilizer brackets to accommodate the new configuration.
7. Place the nut plate behind the RETMA rail and install and tighten the two 10-32 truss-head screws provided to secure the stabilizer bracket.
8. Position the new actuator latch ❷ to properly engage the interlock actuator bracket ❸, and tighten the two 6-32 set screws to secure the latch.
9. Now tighten the screws to secure the bottom mounting bracket ❹.

The expanded view (A) shows the position of the actuator latches when all systems are pushed into the cabinet. The expanded view (B) shows the position of all actuator latches after one system has been pulled out.

Note

The interlock system is compatible with the AlphaServer 2100A low-profile system. Other systems may not be compatible because the interlock actuator bracket may not engage properly. In these cases, do not install the interlock actuator bracket on those systems.

Warning

If a system is installed without an interlock actuator bracket or the vertical bar in the cabinet does not engage properly with the system interlock actuator bracket, it is the customer's responsibility to provide a stable cabinet.

Figure 2–11 The Interlock System

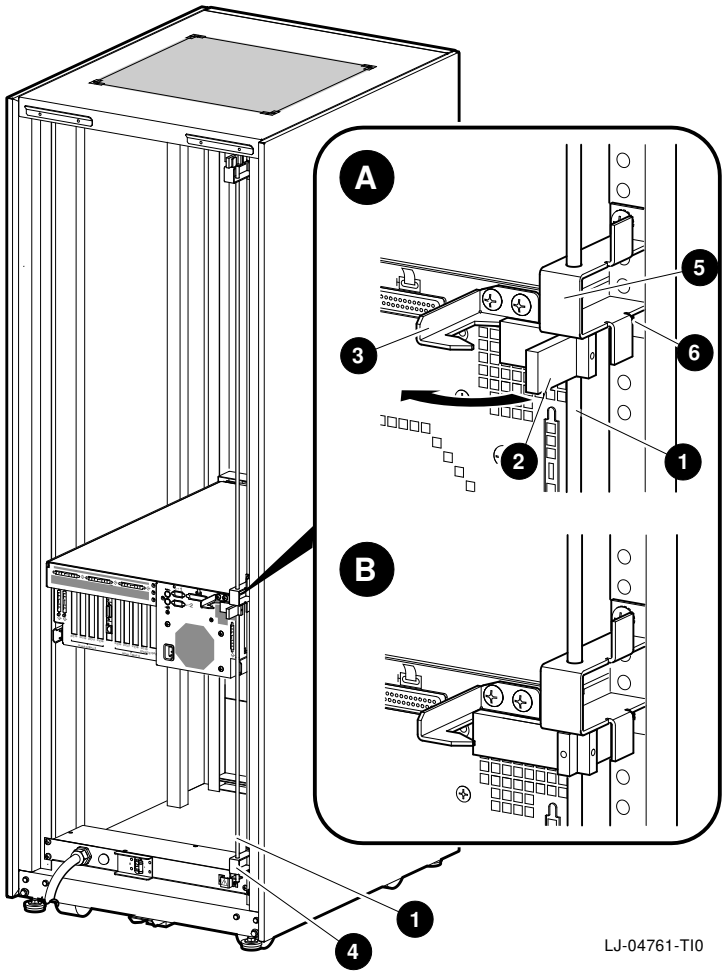

Installing the Cable Management System

The cable management system consists of two brackets (PN: 74-51123-01 and 74-48881-01) and cable tie wraps. When installed, the cable management system keeps the data cables and power cord(s) in place to prevent them from being damaged when the system is pulled out or pushed into the cabinet.

To install the cable management system, refer to Figure 2–12 and proceed as follows:

1. Slide the system into the cabinet.
2. Attach the system cable management bracket (PN: 74-51123-01) ❶ to the four studs ❷ on the rear of the system using four M4 x 7 mm kepnuts ❸.
3. Locate the 8th and 11th rear cabinet rail mounting holes in the installation area established in the Determining the Installation Area section (refer to Figure 2–5).
4. Slide four U-nuts ❹ over the appropriate holes.
5. Attach the cabinet cable management bracket (PN: 74-48881-01) ❺ to the rear cabinet rails using four 10-32 truss-head screws ❻.

Note

The system cable management bracket shipped with the system may not look like the one shown in Figure 2–12. The vertical position of the cabinet cable management bracket is actually higher than shown in Figure 2–12.

Figure 2–12 Installing the Cable Management Brackets

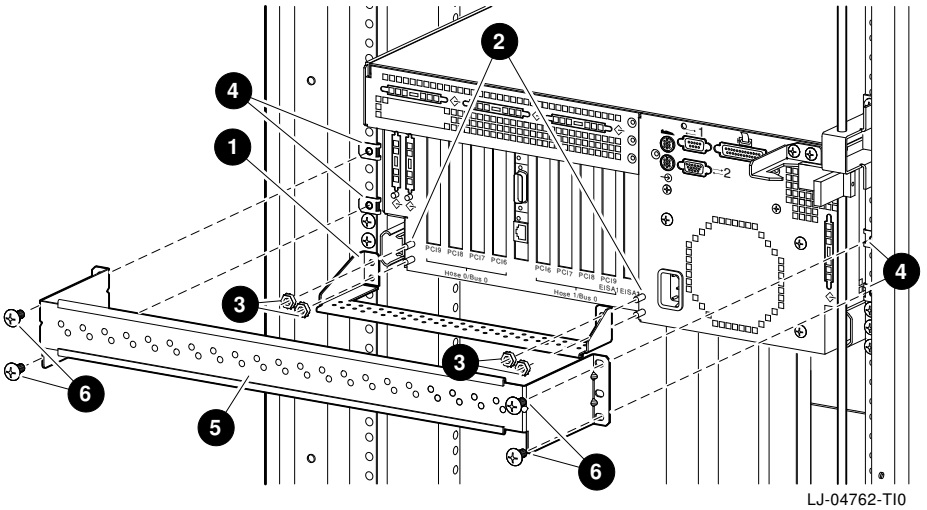

Cable Management: Cable Routing Guidelines

When routing the data cables and power cord(s) from the system to other devices, use the following guidelines:

1. Route the data cables from the system rear ports down to the system cable management bracket on the rear of the system and secure them to the bracket using cable tie wraps. There are holes in the bracket for this purpose.

   Refer to Figure 2–13 for an example of how a data cable connected to the SCSI port would be attached and routed using the two cable management brackets.

   Warning

   To prevent any equipment damage and possible injury, ensure that the cabinet is stabilized before pulling the system out of the cabinet.

2. Pull the system out of the cabinet to the full travel of the slides.
3. Route the data cables over the top of the cabinet cable management bracket. Attach these data cables along the outside of the cabinet cable management bracket using cable tie wraps (refer to Figure 2–13).

   Ensure that there is enough slack in the data cables to prevent stress (pulling) where the data cables are attached to the two cable management brackets.
4. Route the data cables to the appropriate equipment for connection. The routing of these data cables is dependent on the location of the network, peripheral, and terminal connections.

Figure 2–13 Example of Cable Routing

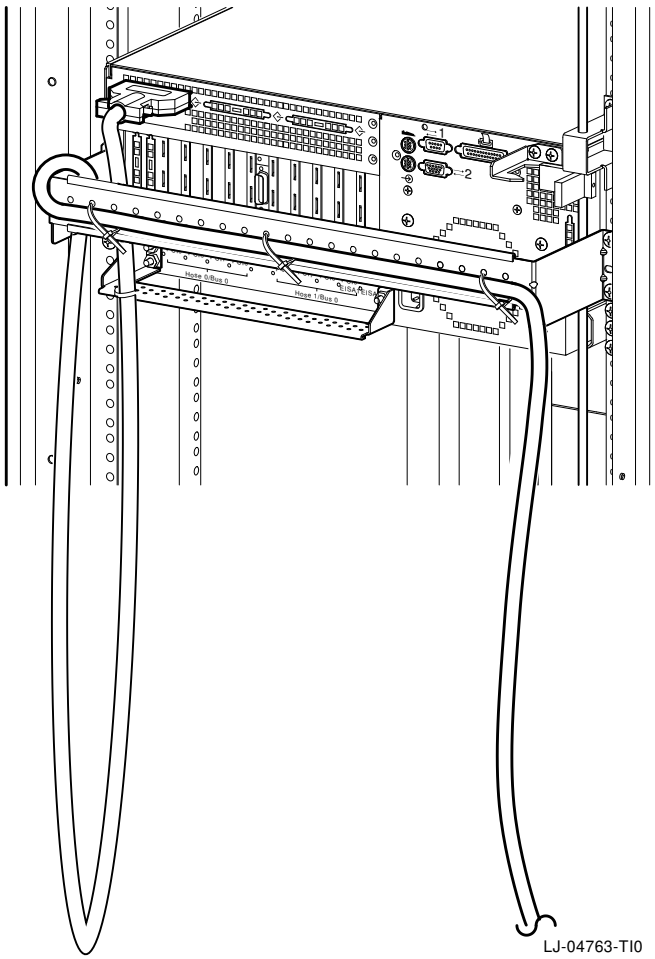

Connecting to Networks

Overview

The standard network option for your system is Ethernet. However, your system can support other network options by using network adapters that can be connected to the EISA and PCI buses.

For information about connecting your system to networks other than Ethernet, refer to the documentation that came with the network adapter.

Ethernet

The system can be connected to an AUI or 10BASE-T Ethernet network as shown in Figure 2–14.

Figure 2–14 Ethernet Network Connections

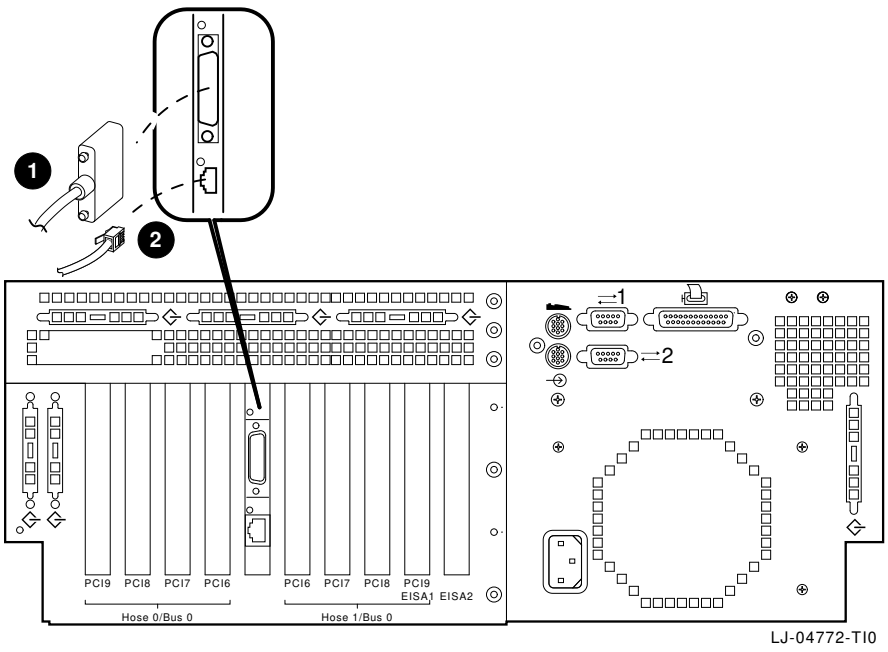

❶ AUI Ethernet connector

❷ 10BASE-T Ethernet connector

Connecting Peripherals

Serial/Parallel Connections

Connect a serial or parallel printer, modem, or console terminal to your system through the serial and parallel ports at the rear of the system (refer to Figure 2–15).

Caution

Before connecting serial or parallel devices to the system, turn off the dc power to the system as described in the Turning the System Off section.

For information about connecting a specific device to your system, refer to the documentation for that device.

Note

The cable that connects to the rear of the VGA terminal has multiple plugs. These plugs are either color-coded or coded by letters that indicate the color. Use the coding on the cable and the corresponding coding on the terminal to determine where to attach each cable plug.

Figure 2–15 Connecting Serial and Parallel Devices

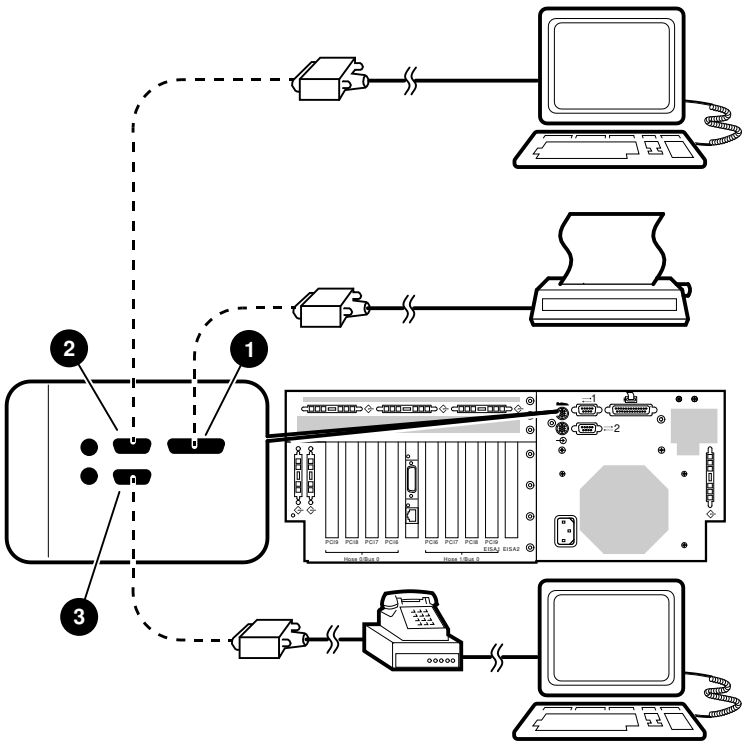

❶ Parallel port

❷ Serial port (COM1) (console terminal)

❸ Serial port (COM2) (auxiliary console device)

Terminal Connections

Either a VGA monitor or a Digital VT–series terminal (VT*xxx*) can be connected to the system as shown in Figure 2–16.

Caution

Before connecting a terminal to the system, turn off the dc power to the system as described in the Turning the System Off section.

For information about connecting a specific terminal to your system, refer to the documentation for that terminal.

Note

Digital VT–series terminal (VT*xxx*) requires an H8571-J serial adapter that is included with every system.

Figure 2–16 Terminal Connections

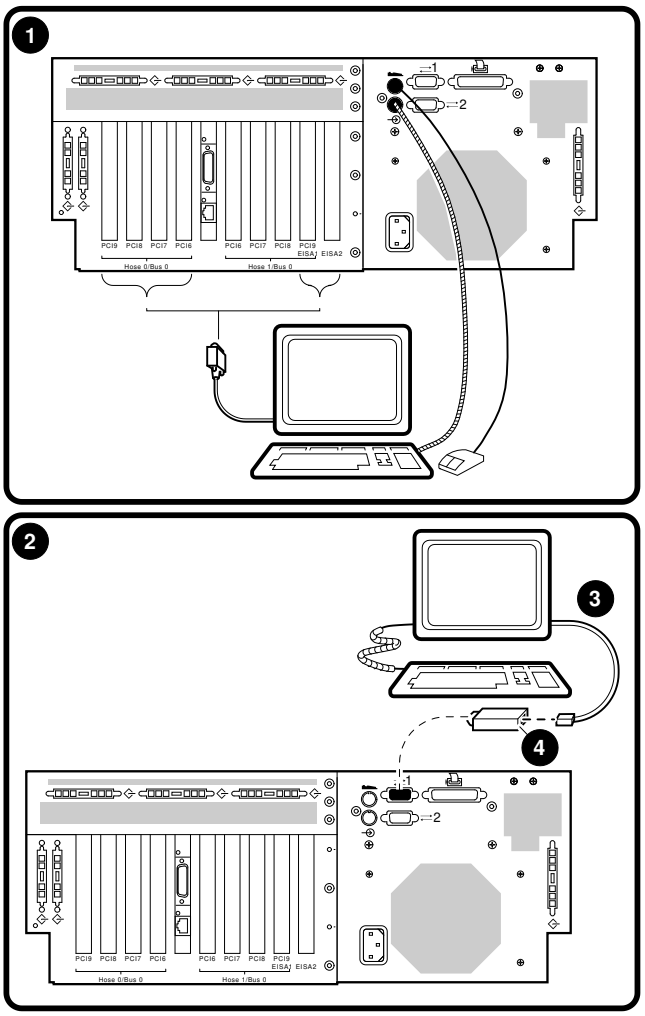

LJ-04767-TI0

❶ VGA monitor
❷ Digital VT-series terminal
❸ 9600 baud rate (default)
❹ H8571-J serial adapter

Installing Keyboard/ Mouse/Video Extension Cables

The 2T-450KM keyboard/mouse/video extension cable kit is used with the AlphaServer 2100A low-profile system to extend the keyboard, mouse, and video monitor cables, and to allow the keyboard, mouse, and video monitor to be located *outside* the system equipment cabinet. The 2T-450KM keyboard/mouse/video extension cable kit consists of two 5 m (16.40 ft) keyboard/mouse cables and one 2 m (6.56 ft) video cable.

Use Figure 2–17 and the following procedure to install the 2T-450KM keyboard/mouse/video extension cable kit:

1. Open the rear door of the equipment cabinet to access the rear of the AlphaServer 2100A low-profile system chassis.
2. Connect the male end of one of the 5 m (16.40 ft) extension cables to the keyboard connector ❶ on the rear of the AlphaServer 2100A low-profile system chassis.
3. Route this extension cable to the cable management bracket ❷ on the rear of the AlphaServer 2100A low-profile system chassis and secure it to the bracket using cable tie wraps.
4. Route this extension cable to the cabinet cable management bracket ❸ and secure it along the outside of the bracket using cable tie wraps.

Caution

Ensure that there is enough slack in the extension cable to prevent stress (pulling) where the extension cable is attached to the two cable management brackets when the chassis is fully extended on the slides.

5. Route this extension cable down and out through the cable egress area located at the bottom rear of the equipment cabinet.
6. Connect the female end of the keyboard extension cable ❹ to the keyboard cable ❺.
7. Connect the male end of the other 5 m (16.40 ft) extension cable to the mouse connector ❻ on the rear of the AlphaServer 2100A low-profile system chassis.

8. Route this extension cable to the cable management bracket ❷ on the rear of the AlphaServer 2100A low-profile system chassis and secure it to the bracket using cable tie wraps.
9. Route this extension cable to the cabinet cable management bracket ❸ and secure it along the outside of the bracket using cable tie wraps.

Caution

Ensure that there is enough slack in the extension cable to prevent stress (pulling) where the extension cable is attached to the two cable management brackets when the chassis is fully extended on the slides.

10. Route this extension cable down and out through the cable egress area located at the bottom rear of the equipment cabinet.
11. Connect the female end of the mouse extension cable ❼ to the mouse cable ❽.
12. Connect the male end of the 2 m (6.56 ft) extension cable to the video card connector ❾ on the rear of the AlphaServer 2100A low-profile system chassis.
13. Route this extension cable to the cable management bracket ❷ on the rear of the AlphaServer 2100A low-profile system chassis and secure it to the bracket using cable tie wraps.
14. Route this extension cable to the cabinet cable management bracket ❸ and secure it along the outside of the bracket using cable tie wraps.

Caution

Ensure that there is enough slack in the extension cable to prevent stress (pulling) where the extension cable is attached to the two cable management brackets when the chassis is fully extended on the slides.

15. Route this extension cable down and out through the cable egress area located at the bottom rear of the equipment cabinet.

16. On the female end of the video extension cable ❿, ensure that two washers and standoffs ⓫ are installed.
17. Connect the female end of the video extension cable ❿ to the male end of the BC13L-10 video monitor cable ⓬.
18. Connect the female end of the BC13L-10 video monitor cable to the video monitor.
19. Close the rear door of the equipment cabinet.

Figure 2–17 Installing the Keyboard/Mouse/Video Extension Cables

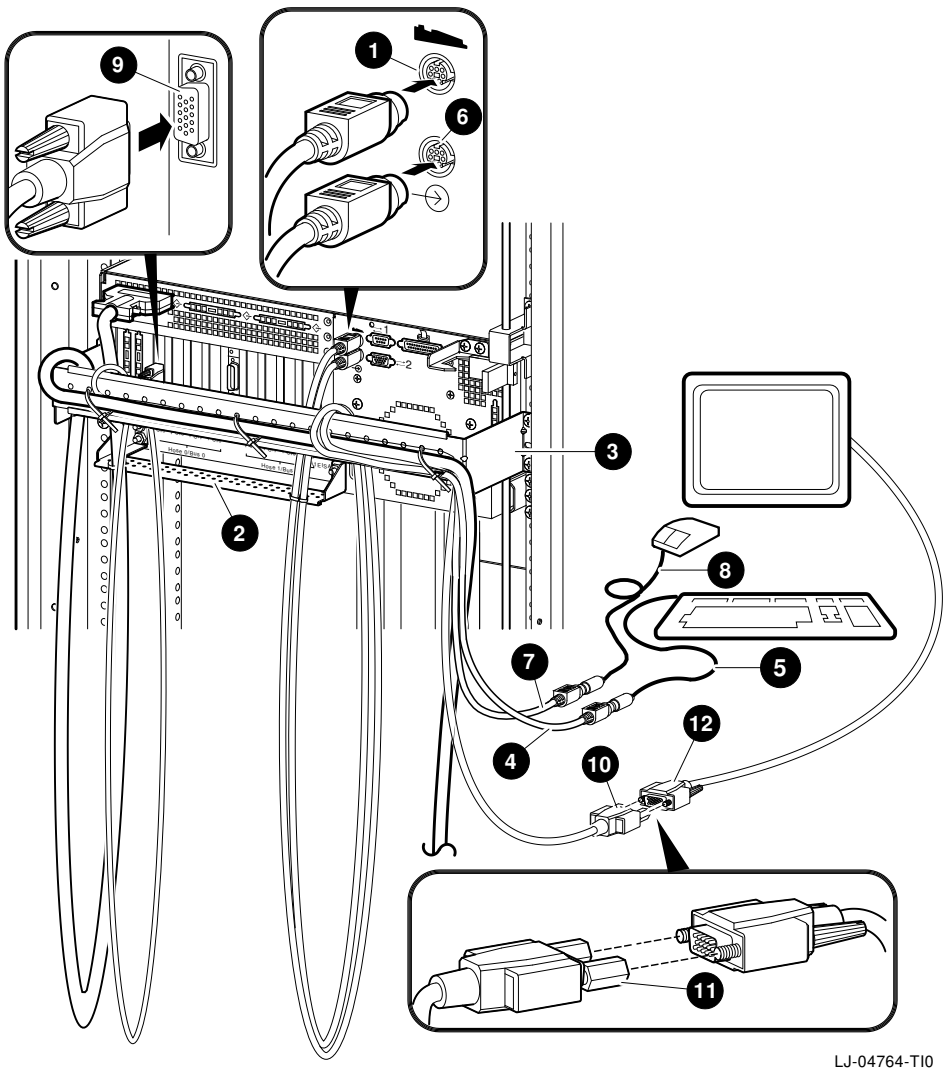

Expanding the System

The AlphaServer 2100A low-profile system can be expanded by installing SCSI, RAID, and/or DSSI options, internally cabling them to the appropriate SCSI-2/DSSI or SCSI-3 port knockouts, and then connecting the appropriate cable from the SCSI device connector (refer to Figure 2–18).

Figure 2–18 SCSI Expansion and Optional RAID and/or DSSI Ports

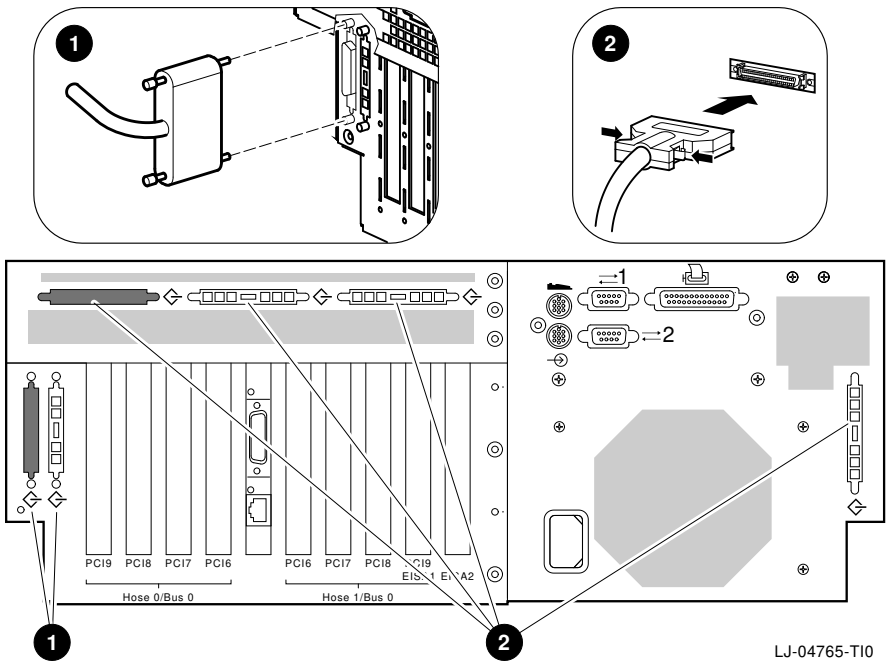

❶ SCSI-2/DSSI port knockouts ❷ SCSI-3 port knockouts

3

Setup and Basic Operation

In This Chapter

This chapter describes the setup and basic operation of the AlphaServer 2100A low-profile system. It contains the following topics:

- Turning the System On
- Turning the System Off
- Invoking Console Mode

Turning the System On

Overview

Turning on the system involves the following major steps:

1. Checking the system settings
2. Applying power to the system
3. Checking the diagnostic indicators
4. Booting the operating system

Before You Begin

To perform some of the instructions in this procedure, the OCP door will need to be opened. The key used to lock and unlock the OCP door is shipped with the system in the system accessories carton. The keylock on the front of the system is shown in Figure 1–4.

Checking the System Settings

Before turning the system on, ensure that the system buttons are in the positions shown in Figure 3–1.

Figure 3–1 Powered-Down System Settings

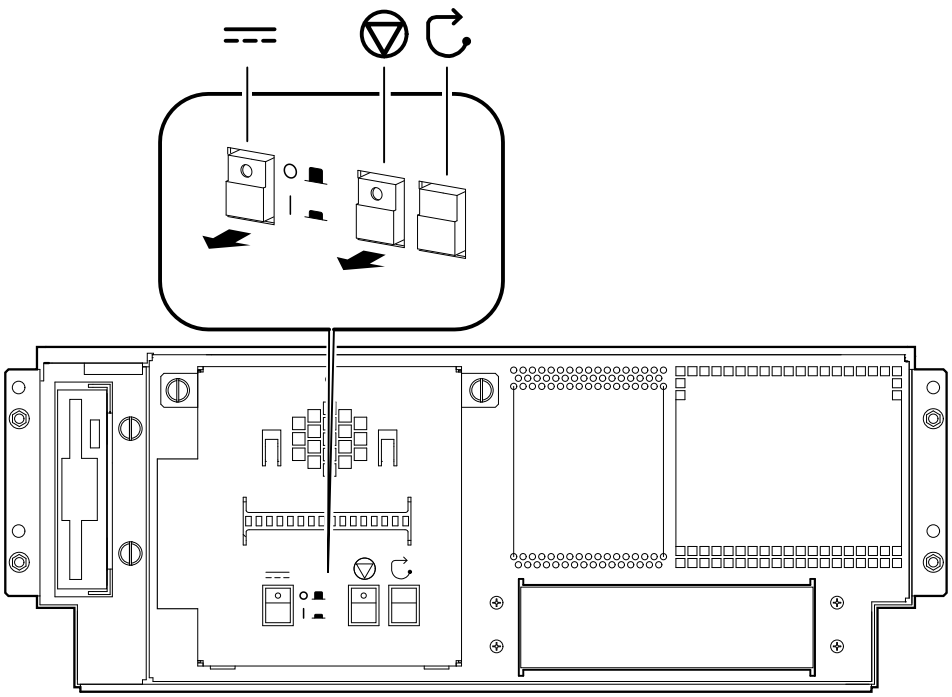

LJ-04766-TI0

Applying Power to the System

Note

If there are any external expansion boxes (for example, expansion boxes that house storage devices) connected to the system, turn the power to those devices on first before applying power to the system.

Apply power to the system as shown in callouts ❶ through ❸ in Figure 3–2.

Figure 3–2 Applying Power to the System

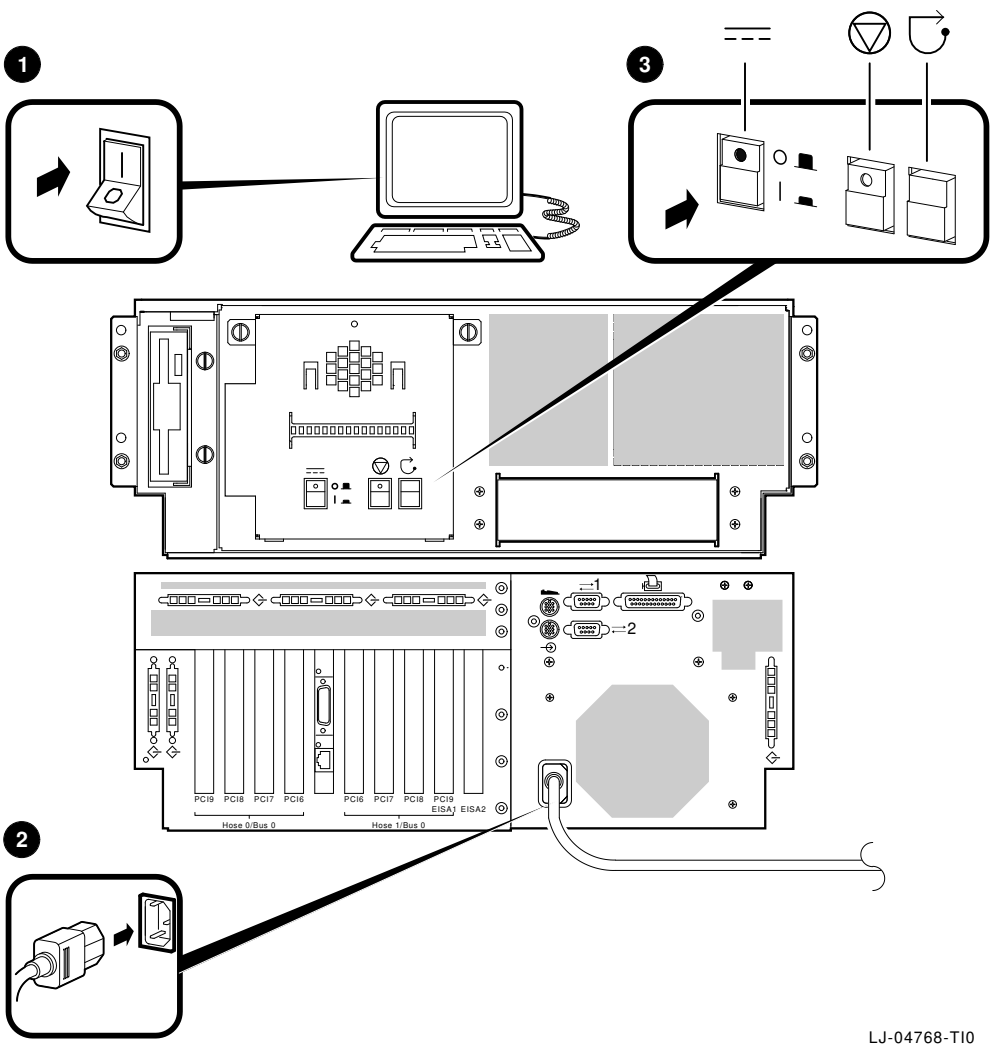

LJ-04768-TI0

Checking the Diagnostic Indicators

After the system is turned on, check the status of three diagnostic indicators (refer to Figure 3–3): the power-up /diagnostic display ❶ on the operator control panel, the system startup screen ❷, and the console prompt ❸ (Digital UNIX or OpenVMS systems) or Main menu (Windows NT systems).

If any of the diagnostic indicators do not appear as described, refer to Chapter 5 for help.

Figure 3–3 System Startup Diagnostic Indicators

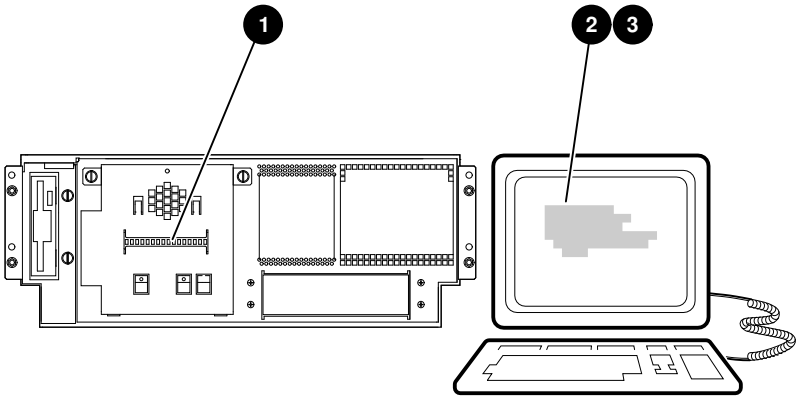

LJ-04769-TI0

Power-Up/Diagnostic Display

The power-up/diagnostic display will display the following message for several seconds:

```
starting console
```

Once the system has completed self-tests, the power-up /diagnostic display will display the value of the ocp_text environment variable (default value is ‘‘Alpha xx MHz’’). For information about changing the value of the ocp_text environment variable, refer to the ‘‘set ocp_text’’ section in Chapter 1 of the *AlphaServer 2000/2100/2100A Firmware Reference Guide* (EK-AXPFW-RM).

System Startup Screen

The system startup screen will scroll. To stop the screen display from scrolling, enter Ctrl/S. To resume scrolling, enter Ctrl/Q. To display any error messages that may have scrolled by, enter the `cat el` command.

The screen will look similar to the following example:

```
VMS PALcode V1.17-1, OSF PALcode V1.21-1
starting console on CPU 0
initialized idle PCB
initializing semaphores
initializing heap
initial heap 1c0c0
memory low limit = 154000
heap = 1c0c0, 13fc0
initializing driver structures
initializing idle process PID
XDELTA not enabled
initializing file system
initializing timer data structures
lowering IPL
CPU 0 speed is 4.00 ns (250MHz)
access NVRAM
entering idle loop
Starting Memory Diagnostics
Testing CSIC on Memory Module 2
Testing all memory banks in parallel
Testing Memory bank 0
Testing Memory bank 1
Testing Memory bank 2
Testing Memory bank 3
Configuring Memory Modules
Configured memory size = 8000000
Memory Diagnostics completed
probing hose 0, PCI
probing PCI-to-EISA bridge, bus 1
probing PCI-to-PCI bridge, bus 2
bus 2, slot 0 -- ewa -- DECchip 21040-AA
bus 2, slot 1 -- pka -- NCR 53C810
bus 0, slot 6 -- pkb -- NCR 53C810
bus 0, slot 8 -- vga -- S3 Trio64/Trio32
probing hose 1, PCI
bus 0, slot 6 -- ewb -- DECchip 21040-AA
bus 0, slot 7 -- ewc -- DECchip 21040-AA
bus 0, slot 8 -- pkc -- DEC KZPSA
initializing keyboard
```

```
Memory Testing and Configuration Status
Module   Size    Base Addr   Intlv Mode  Intlv Unit  Status
------   -----   ---------   ----------  ----------  ------
  2      128MB   00000000      1-Way         0       Passed
Total Bad Pages 0
Testing the System
Testing the Disks (read only)
Testing the Network
environment variable mopv3_boot created
AlphaServer 2100A Console X4.4-8615, built on Dec 19 1995 at 14:39:09
```

Console Prompt or Main Menu

The appropriate response on your console terminal depends on the operating system that you plan to boot.

Note

If neither a console system prompt or a Main menu is displayed, press Return several times.

Digital UNIX or OpenVMS Systems

Digital UNIX and OpenVMS systems are supported by the SRM firmware. Refer to Chapter 1 in the *AlphaServer 2000/2100 /2100A Firmware Reference Guide* (EK-AXPFW-RM) for an overview of the console subsystem.

If booting Digital UNIX or OpenVMS systems, the following console prompt for the SRM firmware should be displayed:

```
P00>>> (1 CPU or multiple CPUs)
```

Windows NT Systems

Windows NT systems are supported by the ARC firmware. Refer to Chapter 3 in the *AlphaServer 2000/2100/2100A Firmware Reference Guide* (EK-AXPFW-RM) for an overview of the console subsystem.

If booting Windows NT systems, the following screen should be displayed:

Example 3–1 Boot Menu Example

```
ARC Multiboot Alpha Version n.nn
Copyright (c) 1993 Microsoft Corporation
Copyright (c) 1993  Digital Equipment Corporation

Boot menu:

   Boot Windows NT
   Boot an alternate operating system
   Run a program
   Supplementary menu...

Use the arrow keys to select, then press Enter.
```

Note

If the response on your terminal does not correspond to the operating system that you plan to boot, you are using the wrong console interface for your operating system. Switch to the other console as described in the following information.

Switching from SRM to ARC

To switch from the SRM console interface to the ARC console interface, enter the `arc` command as follows:

```
P00>>> arc
```

Once the console firmware is loaded and the system is initialized, the first screen of the ARC console interface is displayed.

Switching from ARC to SRM

To switch from the ARC console interface to the SRM console interface, perform the following steps:

1. From the Boot menu, select the Supplementary menu.
2. From the Supplementary menu, select `Set up the system`.
3. From the Setup menu, select `Switch to OpenVMS or Digital UNIX console`. The operating system console can be selected.
4. Select the operating system and press Enter on `Setup menu`.
5. When the message `Power-cycle the system to implement the change` displays, press the Reset button. (Do not press the DC On/Off button.)

Once the console firmware is loaded and the system is initialized, the SRM console interface prompt is displayed.

Preboot Tasks

You may need to perform some of the following tasks before booting your operating system:

- Run the EISA Configuration Utility.
- Check the required environment variable settings.
- Change the way that your system powers up or boots.
- Verify your configuration.

The remainder of this section contains more information about each of these tasks.

Run the EISA Configuration Utility

If an EISA or ISA module has been added, removed, or moved, the EISA Configuration Utility must be run before booting the operating system. Refer to the EISA Bus Options section in Chapter 4.

Check the Required Environment Variable Settings—Digital UNIX or OpenVMS

If running Digital UNIX or OpenVMS, check that the settings for the following environment variables match your configuration. The console command to reset the variable is shown in parentheses. Refer to Chapter 1 in the *AlphaServer 2000 /2100/2100A Firmware Reference Guide* (EK-AXPFW-RM) for more information on these commands.

- Operating system (`set os_type`)
- Ethernet device type (`set ew*0_mode`)
- Speed for Fast SCSI devices (`set pk*0_fast`)
- Boot device (`set bootdef_dev`)
- Boot flags (`set boot_osflags`)

Reminder

Except for the `set bootdef_dev` and the `set boot_osflags` commands, the environment variables are set by initializing the system before booting the operating system. The system can be initialized either by entering the `init` command at the `P00>>>` prompt or by pressing the Reset button on the OCP.

Change Default Power-Up or Bootstrap

To change the way the system powers up or boots the operating system, change the default values for your system's environment variables. Typical changes would be to set the system to autoboot or to change the default boot device.

- For Digital UNIX or OpenVMS systems, review Chapter 1 in the *AlphaServer 2000/2100/2100A Firmware Reference Guide* (EK-AXPFW-RM). Also see the console command pages in that chapter.
- Windows NT systems boot automatically. To prevent autoboot, select one of the menu options. Review Chapter 3 and Chapter 4 in the *AlphaServer 2000/2100/2100A Firmware Reference Guide* (EK-AXPFW-RM).

Verify Your Configuration

- Digital UNIX or OpenVMS systems

  The following SRM console commands are used to verify system configuration on systems running either the Digital UNIX or OpenVMS operating system:

  - `show config` (show_config)—Displays the buses on the system and the devices found on those buses.
  - `show device` (show_device)—Displays the devices and controllers in the system.
  - `show memory` (sho_mem)—Displays main memory configuration.
  - `set` and `show` (setting and showing environmental variables)—Set and display environment variable settings.

  For more information about these console commands, refer to Chapter 4.

- Windows NT systems

  The following ARC menu options are used to verify system configuration on systems running the Windows NT operating system:

  - `Available Hardware Devices Display`—Lists the ARC boot devices names for devices installed in the system.
  - `Set Default Variables`—Allows you to select values for Windows NT firmware environment variables.

  For more information about these menu options, refer to Chapter 3 in the *AlphaServer 2000/2100/2100A Firmware Reference Guide* (EK-AXPFW-RM).

Switching Between Operating Systems

Because configuration files are different for each operating system, you must perform the following tasks to switch from one operating system to another on your system:

1. Invoke console mode if you are not already in console mode.

   For information about invoking console mode, refer to the Invoking Console Mode section presented later in this chapter.

2. Insert the System Configuration Diskette for the operating system that you are going to switch to.

3. Run the EISA Configuration Utility (ECU) from that diskette.

   For information about running the ECU, refer to the Configuring EISA Options section in Chapter 4.

4. Remove the ECU diskette.

5. Switch operating systems by following the procedure described in the Console Firmware Overview section in either Chapter 1 or Chapter 3 in the *AlphaServer 2000/2100 /2100A Firmware Reference Guide* (EK-AXPFW-RM).

Booting the Operating System

One of several operating systems can be booted:

- Digital UNIX
- OpenVMS
- Windows NT

In the following instructions, it is assumed that the operating system has already been booted at least once.

Condition	Reference
If Factory Installed Software (FIS) has not been booted	See the Factory Installed Software document that came with your system.
If the system was not shipped with Factory Installed Software, and the operating system software has not been loaded or booted	See the installation documentation that came with your operating system.

Booting Digital UNIX or OpenVMS Software

When booting either Digital UNIX or OpenVMS systems, the console prompt `P00>>>` should be displayed. Boot the operating system as follows:

Step	Action
1	Enter `boot` or `b` at the console prompt. `P00>>> b` The system boots the operating system using the default values for the boot device and boot flags. A ''booting system software'' screen is displayed on the console terminal. After several minutes, the operating system login banner is displayed on the console terminal.
2	Log in at the login prompt. Once the operating system prompt is displayed, the system is ready for normal operation.

For complete information about the `boot` command, refer to the ''boot'' section in Chapter 1 in the *AlphaServer 2000/2100/2100A Firmware Reference Guide* (EK-AXPFW-RM).

Booting Windows NT Software

When booting a Windows NT system, the Windows NT menu should be displayed (refer to Example 3–1).

Windows NT will automatically begin booting after the Main menu is displayed for several seconds.

Autobooting the Operating System

If the system is set to autoboot, the operating system will automatically boot after you power up the system, press the Reset button, or after recovery from a system crash.

To autoboot Digital UNIX or OpenVMS systems:

- Set the `auto_action` environment variable to either ''boot'' or ''restart.'' For more information, refer to the `set auto_action` command in Chapter 1 in the *AlphaServer 2000/2100/2100A Firmware Reference Guide* (EK-AXPFW-RM).
- Ensure that the default boot device has been set to the device from which you want the operating system to boot. (Enter `show bootdef_dev` to see whether your default boot device has already been assigned.) For information about setting the default boot device, refer to the `set bootdef_dev` command in Chapter 1 in the *AlphaServer 2000/2100/2100A Firmware Reference Guide* (EK-AXPFW-RM).

Note

The Windows NT operating system will always autoboot.

Turning the System Off

Before You Begin

It may not be necessary to turn the system off to recover from system problems. Recovery from hangs or other minor problems are often solved by pressing the Reset button on the OCP. For maximum reliability, Digital recommends minimizing the number of times that the system is turned on or off.

Turning Off the DC Power

If the system needs to be turned off, proceed as follows:

1. Shut down the operating system according to the operating system shutdown procedure described in your operating system documentation.
2. Press the DC On/Off button and the Halt button to the positions shown in Figure 3–4. (If the Halt button is set to the in position, the system will not boot the next time the system is turned on.)

Figure 3–4 Turning Off the System

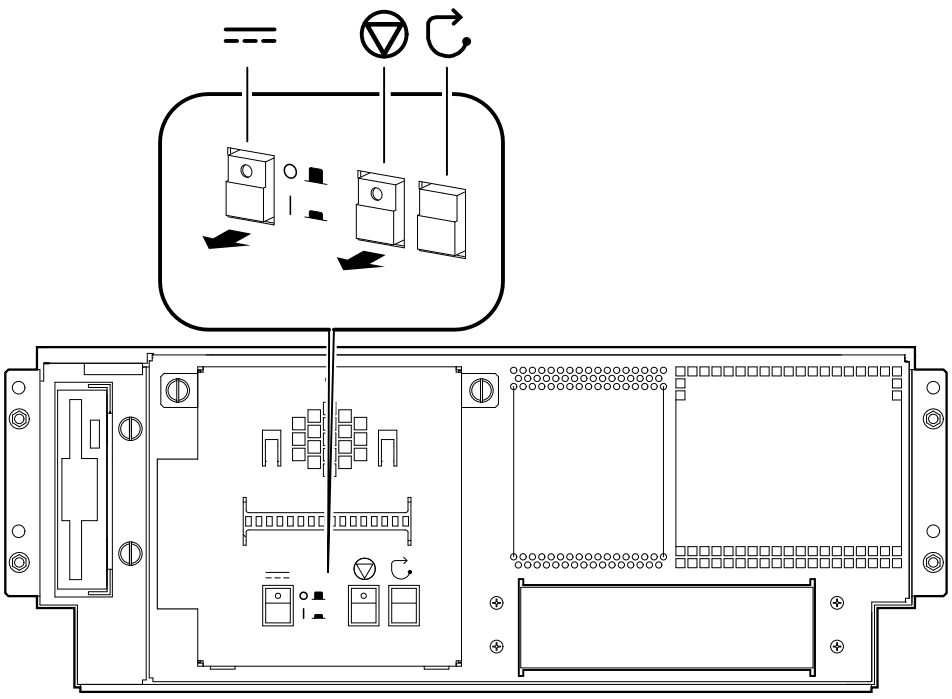

LJ-04766-TI0

Extended Power-Down (AC Power)

If an extended power-down is required, proceed as follows:

1. Turn off the dc power to the system as described in the previous section.
2. Turn off the ac power to the system by unplugging the ac power cord as shown in Figure 3–5.

Figure 3–5 Turning Off the AC Power

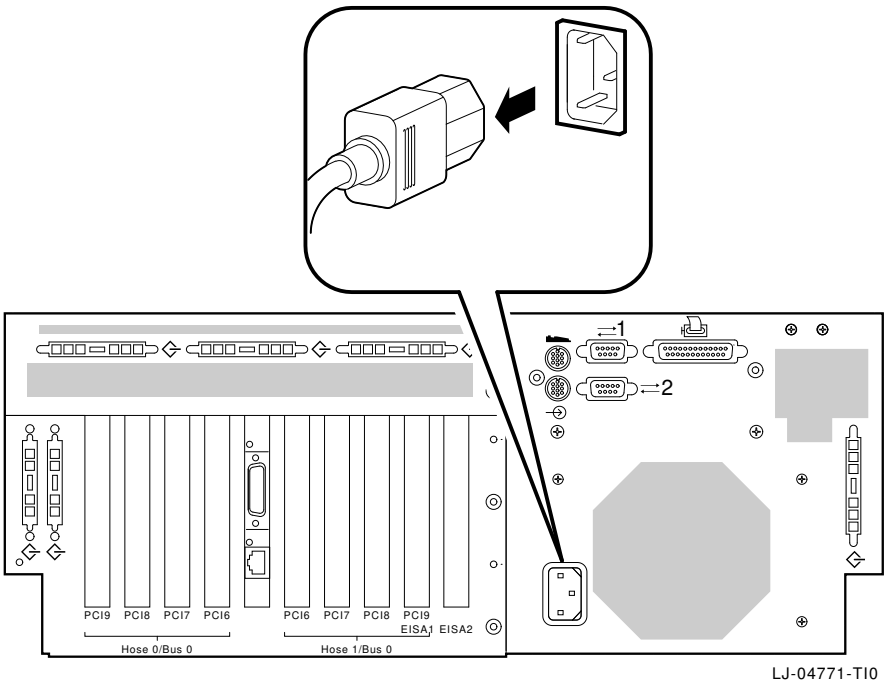

Invoking Console Mode

Console Subsystem

On Alpha systems, underlying control of the system platform hardware is provided by a console subsystem. The console subsystem contains firmware code (software code embedded in the hardware) that offers service functions such as initializing and testing the hardware and bootstrapping the system software. Because the AlphaServer 2100A low-profile system supports multiple operating systems, the server has two different versions of console firmware. They are explained in detail in Chapter 1 (for users running Digital UNIX or OpenVMS) and Chapter 3 (for users running Windows NT) in the *AlphaServer 2000/2100 /2100A Firmware Reference Guide* (EK-AXPFW-RM).

Console Terminal

A console terminal is *required* for your system. It allows the issuing of commands to the system while the operating system is not running.

Console Mode

Console mode is the state in which the system and the console terminal operate under the control of the console firmware. When commands can be issued from the console terminal and firmware is executing, the system is in the console mode.

On Digital UNIX and OpenVMS systems, the console mode prompt for a system with one CPU or multiple CPUs is `P00>>>`. The control characters and supported keys can be used to enter console commands at the console mode prompt.

Invoking Console Mode

Invoke console mode by shutting down the operating system according to the operating system shutdown procedure described in your operating system documentation.

Using the Halt Button

If running Digital UNIX or OpenVMS, the console mode can be invoked by pressing the Halt button on the operator control panel. However, ensure that the operating system is shut down first.

Caution

Press the Halt button only after the operating system has been shut down using the proper software shutdown procedure.

Pressing the Halt button has no effect if the system has already booted Windows NT.

For more information about using the Halt button, refer to Figure 1–3.

Remote Access

When running Digital UNIX or OpenVMS systems, the console mode can be invoked from a remote terminal that is connected to the system through the COM2 port at the rear of the system (refer to Figure 2–15).

To invoke console mode in this way, perform the following steps:

1. Connect the remote terminal to the system.
2. Shut down the operating system.
3. When the shutdown completes, press Return.
   The console prompt (P00>>>) is displayed.

4

Options and Upgrades

In This Chapter

This chapter covers the following topics:

- Upgrade Overview
- Supported Options
- Verifying System Configuration
- Configuring System Options
  - System Bus
  - EISA Bus
  - ISA Bus
  - PCI Bus
  - SCSI Buses
- Console Port Configurations

Upgrade Overview

Planning Your Upgrade

Plan an upgrade by performing the following tasks:

1. **Acquire an accurate list of the modules and devices in your current configuration.**

   Refer to your operating system documentation for information about acquiring configuration information using an operating system command.

   This information can be acquired in console mode. (Refer to the Invoking Console Mode section in Chapter 3 for information about invoking console mode.) Once you are in console mode, find the configuration information as follows:

   - If running Digital UNIX or OpenVMS, acquire a list of your system's modules and devices by entering the `show configuration` command at the console prompt. (Refer to the Verifying System Configuration section in this chapter for more information.)
   - If running Windows NT, acquire a list of your system's modules and devices by following the instructions in the Listing ARC Firmware Boot Device Names section in Chapter 3 in the *AlphaServer 2000/2100/2100A Firmware Reference Guide* (EK-AXPFW-RM).

2. **Decide how your system will be changed.**

   Refer to the *Digital Systems and Options Catalog* to obtain the current description of the supported options.

3. **Order the option(s).**

4. **Install and configure the option(s) using the information in this chapter.**

   - To install the option, refer to the documentation shipped with the option.
   - To configure the option, refer to the appropriate section in this chapter.

Adding Third-Party Devices

Third-party devices are devices purchased from vendors other than Digital Equipment Corporation.

Before attempting to connect third-party devices or install third-party devices inside your system unit, first check with the third-party vendor to ensure that your system and operating system support the device.

For information about connecting third-party SCSI or licensed DSSI devices to the system by extending a mass-storage bus, refer to the SCSI Buses section presented later in this chapter.

Warning: For protection against fire, only use modules with current-limited outputs.

Supported Options

Ordering Options

For a list of the supported options, refer to the *Digital Systems and Options Catalog*.

Digital Equipment Corporation regularly publishes the *Digital Systems and Options Catalog* to assist customers in ordering and configuring systems and hardware options. Each printing of the catalog presents all of the products that are announced, actively marketed, and available for ordering. If necessary, past editions should be retained for reference.

- To obtain the latest printed catalog, call 1-800-DIGITAL or contact your Digital service representative.
- Internet participants can obtain printable PostScript files of any section of the catalog from the Internet. To access files over the Internet, issue the following commands:

```
ftp gatekeeper.dec.com
cd /pub/digital/info/soc
```

Verifying System Configuration

Before You Begin

Several console commands or menu options allow examination of the system configuration and environment variable settings.

To use these console commands or menu options, the console mode must be invoked. For information about invoking console mode, refer to the Invoking Console Mode section in Chapter 3.

Firmware Menu Options for Windows NT

The following ARC menu options are important for verifying system configuration on systems running the Windows NT operating system:

- `Available Hardware Devices Display`—Lists the ARC device names for devices installed in the system.
- `Set Default Variables`—Allows the selection of values for Windows NT firmware environment variables.

For information about using these menu options, refer to Chapter 3 in the *AlphaServer 2000/2100/2100A Firmware Reference Guide* (EK-AXPFW-RM).

Note

The next sections describe the SRM console configuration commands. If running the Windows NT operating system, go to the System Bus Options section in this chapter.

Firmware Console Commands for Digital UNIX and OpenVMS

The following SRM console commands are important for verifying system configuration on systems running either the Digital UNIX or OpenVMS operating system.

- `show config` (described in the show config section)—Displays the buses on the system and the devices found on those buses.
- `show device` (described in the show device section)—Displays the devices and controllers in the system.
- `show memory` (described in the show memory section)– Displays main memory configuration.
- `set` and `show` (described in the Setting and Showing Environment Variables section)–Set and display environment variable settings. For more information about using the `set` and `show` commands to set and display environment variables, refer to Chapter 1 in the *AlphaServer 2000/2100 /2100A Firmware Reference Guide* (EK-AXPFW-RM).

show config

The `show config` command displays all devices found on the system bus, PCI bus, and EISA bus. The information in the display can be used to identify target devices for commands such as `boot` and `test`, as well as to verify that the system sees all the devices that are installed.

The configuration display includes the following:

- Core system status:

  CPU, memory, and standard I/O are shown with the results of power-up tests: P (pass), F (fail)

The remaining I/O options and devices are displayed beginning with Hose 0, Bus 0, and proceeding through Hose 1, Bus 0.

- Hose 0, Bus 0:
  - PCI slots 2 and 3 are reserved for the PCI-EISA and PCI-PCI devices embedded on the standard I/O module.
  - PCI slots 6-9 are user option slots.
- Hose 0, Bus 1:
  - EISA slots 1 and 2 are user option slots.

- Hose 0, Bus 2:
  - PCI slots 0 and 1 are reserved for the onboard Ethernet and SCSI controllers located on the standard I/O module.
- Hose 1, Bus 0:
  - PCI slots 6-9 are user option slots.

Synopsis:

show config

Example:

```
P00>>> show config

                      Digital Equipment Corporation
                         AlphaServer 2100A 5/250

SRM Console X4.4-9904       VMS PALcode V1.17-2, OSF PALcode V1.21-1

Component       Status      Module ID
CPU 0              P        B2040-AA DECchip (tm) 21164-1
CPU 3              P        B2040-AA DECchip (tm) 21164-1
Memory 0           P        B2021-CA 128 MB
Memory 2           P        B2021-CA 128 MB
I/O                         24389-01
                            dva0.0.0.1000.0         RX26

 Slot   Option              Hose 0, Bus 0, PCI
   2    Intel 82375EB                               Bridge to Bus 1, EISA
   3    DECchip 21050-AA                            Bridge to Bus 2, PCI
   7    DEC KZPSA           pkb0.7.0.7.0            SCSI Bus ID 7

 Slot   Option              Hose 0, Bus 1, EISA
   1    DE425               ewa0.0.0.1001.0         08-00-2B-3E-B6-56
   2    Compaq Qvision

 Slot   Option              Hose 0, Bus 2, PCI
   0    DECchip 21040-AA    ewb0.0.0.2000.0         08-00-2B-E4-B0-09
   1    NCR 53C810          pka0.7.0.2001.0         SCSI Bus ID 7
                            dka0.0.0.2001.0         RZ28

 Slot   Option              Hose 1, Bus 0, PCI
   6    DEC KZPSA           pkc0.7.0.6.1            SCSI Bus ID 7
   8    DECchip 21040-AA    ewc0.0.0.8.1            08-00-2B-E6-BB-FE
P00>>>
```

show device

The `show device` command displays the devices and controllers in the system. The device name convention is shown in Figure 4–1.

Figure 4–1 Device Name Convention

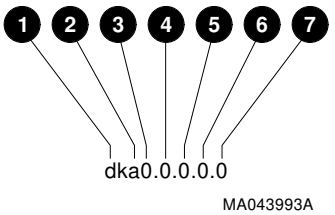

❶ Driver ID:

Two-letter port or class driver designator
DR–RAID set device
DV–Floppy drive
ER–Ethernet port (EISA)
EW–Ethernet port (PCI)
PK–SCSI port, DK–SCSI disk, MK–SCSI tape
PU–DSSI port, DU–DSSI disk, MU–DSSI tape

❷ Storage Adapter ID: One-letter storage adapter designator (A,B,C . . .)

❸ Device Unit Number: Unique device unit number (MSCP Unit Number)

SCSI unit numbers are forced to 100 X Node ID

❹ Bus Node Number: Bus Node ID

❺ Channel Number: Used for multichannel devices

❻ Slot Number:

- For EISA options—Correspond to EISA card-cage slot numbers (1001 = slot 1, 1002 = slot 2)
- For PCI options:
  - 2000 = Onboard Ethernet adapter
  - 2001 = Onboard SCSI controller
  - Slots 6–9 = Correspond to PCI card-cage slots

❼ Hose Number

Synopsis:

show device [device_name]

Argument:

[device_name]	The device name or device abbreviation. When abbreviations or wildcards are used, all devices that match the type are displayed.

Example:

```
P00>>> show device
dka0.0.0.2001.0          DKA0                      RZ28  D41C
dva0.0.0.1000.0          DVA0                   RX26/RX23
ewa0.0.0.2000.0          EWA0          08-00-2B-E7-EB-CC
ewb0.0.0.8.1             EWB0          08-00-2B-E4-EC-EB
ewc0.0.0.9.1             EWC0          08-00-2B-E6-B9-A6
pka0.7.0.2001.0          PKA0              SCSI Bus ID 7
pkb0.7.0.7.0             PKB0              SCSI Bus ID 7   L01  A09
P00>>>
```

show memory

The `show memory` command displays information for each memory module in the system.

Synopsis:

show memory

Example:

```
P00>>> show memory
 ❶      ❷       ❸          ❹          ❺         ❻
Module   Size    Base Addr   Intlv Mode  Intlv Unit  Status
------   -----   ---------   ----------  ----------  ------
  0       128MB  00000000      1-Way         0       Passed
  1                                                  Not Installed
  2                                                  Not Installed
  3                                                  Not Installed
Total Bad Pages 0 ❼
P00>>>
```

❶ Module slot number

❷ Size of memory module

❸ Base or starting address of memory module

❹ Interleave mode—number of modules interleaved (1–4-way interleaving)

❺ Interleave unit number

❻ Status (passed, failed, or not installed)

❼ Number of bad pages in memory (8 kB/page)

Setting and Showing Environment Variables

Environment variables are typically set when you are configuring a system.

Synopsis:

set [-default] [-integer] -[string] envar value

show envar

Arguments:

envar	The name of the environment variable to be modified.
value	The value that is assigned to the environment variable. This may be an ASCII string.

Options:

-default	Restores variable to its default value.
-integer	Creates variable as an integer.
-string	Creates variable as a string (default).

Examples:

```
P00>>> set bootdef_dev eaz0
P00>>> show bootdef_dev
eza0
P00>>> show auto_action
boot
P00>>> set boot_osflags 0,1
P00>>>
```

For more information about using the `set` and `show` commands, including the environment variables that you can set, refer to Chapter 1 in the *AlphaServer 2000/2100/2100A Firmware Reference Guide* (EK-AXPFW-RM).

System Bus Options

The system bus interconnects the CPU modules, memory modules, and the optional PCI extended I/O module. It is the hardware structure through which data processed by the microprocessor is transferred throughout the system.

Figure 4–2 shows the location of the system bus ❶ and system bus options ❷ on the card cage. Your system supports options for several types of bus architectures; including EISA, ISA, and PCI. The next sections describe the system bus options for your system.

Figure 4–2 System Bus Option Locations

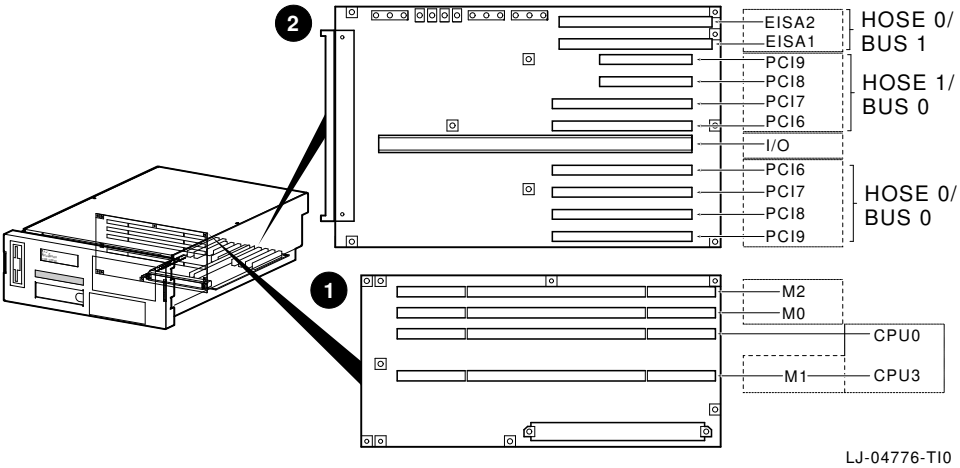

CPU Modules

The system can support up to two (2) CPU modules in a symmetric multiprocessing (SMP) configuration. Note the following:

- All systems must have a CPU module installed in system bus slot 2 (CPU 0).

Warning

Before installing a CPU module, turn off all power to the system (both ac and dc). Refer to the Turning the System Off section in Chapter 3 for information about turning off ac and dc power.

Warning: CPU and memory modules have parts that operate at high temperatures. Wait two minutes *after* power is removed before handling these modules.

Memory Modules

The system can support up to three (3) memory modules (for a maximum memory capacity of 1.5 GB). A minimum of one memory module is required.

Warning

Before installing a memory module, turn off all power to the system (both ac and dc). Refer to the Turning the System Off section in Chapter 3 for information about turning off ac and dc power.

Memory is available in two variations as follows:

- MS451–DA (B2021–FA) 128-MB 60-ns memory
- MS451–FA (B2022–FA) 512-MB 60-ns memory

Standard I/O Module

Warning

Before installing the standard I/O module, turn off all power to the system (both ac and dc). Refer to the Turning the System Off section in Chapter 3 for information about turning off ac and dc power.

The standard I/O module provides the standard set of I/O functions and is required in all systems. The standard I/O module resides in a dedicated slot (SIO) in the I/O card cage (refer to Figure 4–2). It provides:

- A Fast SCSI-2 controller chip that supports the internal storage devices.
- The firmware console subsystem on 512 kB of Flash ROM.
- An Ethernet controller with AUI or twisted-pair connectors.
- A floppy drive controller.
- Two serial ports with full-modem control and the parallel port.
- The keyboard and mouse interface.
- The speaker interface.
- The EISA-to-PCI bridge set.
- The TOY clock.

EISA Bus Options

The EISA bus (Extended Industry Standard Architecture bus) is a 32-bit industry-standard I/O bus. The EISA bus is a superset of the well-established 16-bit ISA bus and has been designed to accept newer 32-bit components while still remaining compatible with older 8-bit and 16-bit cards.

EISA offers good performance, up to 33 MB/s for bus masters and direct memory access (DMA) devices. Up to two (2) EISA or ISA modules can reside in the EISA bus portion of the card cage. Figure 4–2 shows the location of the EISA options in the card cage. Access to the EISA options in the card cage is by way of the top cover shown in Figure 1–6. Ensure that the top cover is secured before turning the system on.

For information about installing a specific option, refer to the documentation for that option. For information about configuring an EISA option, refer to the Configuring EISA and ISA Options section.

Warning

Before installing EISA bus options, turn off all power to the system (both ac and dc). Refer to the Turning the System Off section in Chapter 3 for information about turning off ac and dc power.

Warning: For protection against fire, only use modules with current-limited outputs.

ISA Bus Options

The ISA bus (Industry Standard Architecture bus) is a 16-bit industry-standard I/O bus. The EISA bus is a superset of the well-established ISA bus and has been designed to be backward compatible with 16-bit and 8-bit architectures. Therefore, ISA modules can be used in your server, provided the operating system supports the device.

Up to two (2) EISA or ISA modules can reside in the EISA bus portion of the card cage. Figure 4–2 shows the location of the options in the card cage. Access to the options in the card cage is by way of the top cover shown in Figure 1–6. Ensure that the top cover is secured before turning the system on.

For information about installing a specific option, refer to the documentation for that option. For information about configuring an ISA option, refer to the Configuring EISA and ISA Options section.

Warning

Before installing ISA bus options, turn off all power to the system (both ac and dc). Refer to the Turning the System Off section in Chapter 3 for information about turning off ac and dc power.

Warning: For protection against fire, only use modules with current-limited outputs.

Identifying EISA and ISA Options

The option board can be identified as an EISA or ISA by examining its contacts (refer to Figure 4–3):

- EISA boards have two rows of contacts with several gaps.
- ISA boards have one row of contacts and no more than one gap.

Figure 4–3 EISA and ISA Boards

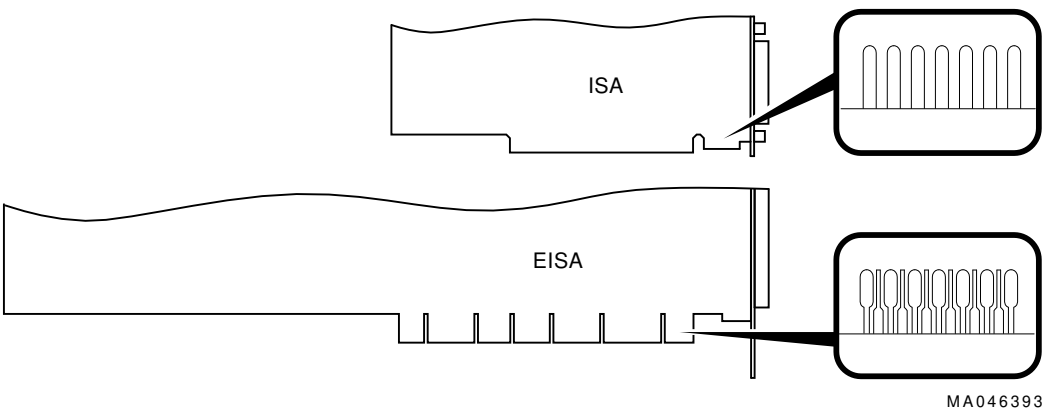

Configuring EISA and ISA Options

EISA Configuration Utility

Whenever adding, removing, or moving an EISA or ISA board in your system, run a utility called the EISA Configuration Utility (ECU). Each EISA or ISA board has a corresponding configuration (CFG) file, which describes the characteristics and the system resources required for that option. The ECU uses the CFG file to create a conflict-free configuration. The ECU is a menu-based utility that provides online help. It serves as a guide through the configuration process. The ECU is run from the ARC menu interface.

System Configuration Diskette

The ECU is supplied on the System Configuration Diskette that was shipped with your system. Make a copy of the System Configuration Diskette and keep the original in a safe place. Use the backup copy for configuring the system. The System Configuration Diskette must have the volume label SYSTEMCFG.

Note

The CFG files supplied with the option to be installed may not work on this system if the option is *not supported*. Before installing an option, ensure that your system supports the option. The *Digital Systems and Options Catalog* lists the supported options.

Before Running the ECU

Before running the ECU, perform the following steps:

1. Install EISA option(s). (Install ISA modules *after* running the ECU.)

   For information about installing a specific option, refer to the documentation for that option.

2. Familiarize yourself with the utility.

   To find more information about the ECU, read the ECU online help. To read the online help, start the ECU (refer to the Starting the ECU section). Online help for the ECU is located under step 1, ''Important EISA Configuration Information.''

3. Familiarize yourself with the configuration procedure for your system:

   - If you are configuring an EISA bus that contains only EISA options, refer to Table 4–1.
   - If you are configuring an EISA bus that contains both ISA and EISA options, refer to Table 4–2.

4. Locate the ECU diskette for your operating system. Make a copy of the ECU diskette and keep the original in a safe place. Use the backup copy for configuring options.

   - ECU Diskette DEC Alpha for Windows NT systems
   - ECU Diskette DEC Alpha for Digital UNIX and OpenVMS systems

   The ECU diskette is shipped in the accessories carton with your system.

Starting the ECU

Complete the following steps to start the ECU:

1. Invoke the console firmware.

   - **For systems running Windows NT**—Shut down the operating system or power up to the console Boot menu.
   - **For systems running Digital UNIX or OpenVMS**—Shut down the operating system and press the Halt button, or power up with the Halt button set to the in position. When the console prompt `P00>>>` displays, set the Halt button to the out position.

2. Start ECU as follows:

   - **For systems running Windows NT**—Select the following menus:

     a. From the Boot menu, select the Supplementary menu.

     b. From the Supplementary menu, select the Setup menu. Insert the ECU diskette for Windows NT systems into the floppy drive.

     c. From the Setup menu, select `Run EISA configuration utility from floppy`. This boots the ECU program.

   - **For systems running Digital UNIX or OpenVMS**—Start the ECU program as follows:

     a. Insert the ECU diskette for Digital UNIX or OpenVMS systems into the floppy drive.

     b. Enter the `ecu` command.

     The message `loading ARC firmware` displays. Loading the ARC firmware takes approximately two (2) minutes. When the firmware has finished loading, the ECU program is booted.

3. Complete the ECU procedure according to the guidelines provided in the following sections.

   - When configuring an EISA bus that contains only EISA options, refer to Table 4–1.

Note

When configuring only EISA options, do not perform step 2 of the ECU, ''Add or remove boards.'' (EISA modules are recognized and configured automatically.)

   - When configuring an EISA bus that contains both ISA and EISA options, refer to Table 4–2.

4. After you have saved and exited from ECU:
   - **For systems running Windows NT**—Remove the ECU diskette from the floppy drive and boot the operating system.
   - **For systems running Digital UNIX or OpenVMS**—Remove the ECU diskette from the floppy drive. Return to the SRM console firmware as follows:
     a. From the Boot menu, select the Supplementary menu.
     b. From the Supplementary menu, select `Set up the system`.
     c. From the Setup menu, select `Switch to OpenVMS or Digital UNIX console`. This allows the operating system console to be selected.
     d. Select your operating system and then press Enter on `Setup menu`.
     e. When the message `Power-cycle the system to implement the change` displays, press the Reset button. (Do not press the DC On/Off button.)

     Once the console firmware is loaded and the device drivers are initialized, boot the operating system.
5. Verify that the new options are configured correctly.

Configuring EISA Options

EISA boards are configured automatically. Refer to Table 4–1 for a summary of steps to configure an EISA bus *that contains no* ISA options. Review the Before Running the ECU section presented earlier in this chapter. Then run the ECU as described in the Starting the ECU section.

Note

It is not necessary to run step 2 of the ECU, ''Add or remove boards.'' (EISA modules are recognized and configured automatically.)

Table 4–1 Summary of Procedure for Configuring EISA Bus (EISA Options Only)

Step	Explanation
Install the EISA option	Use the instructions provided with the EISA option.
Power up the system and run the ECU	If the ECU locates the required CFG files, it displays the Main menu. The CFG file for the option may reside on a configuration diskette packaged with the option or may be included on the System Configuration Diskette. **Note** It is not necessary to run step 2 of the ECU, ''Add or remove boards.'' (EISA modules are recognized and configured automatically.)
View or Edit Details (optional)	The ''View or Edit Details'' ECU option is used to change user-selectable settings or to change the resources allocated for these functions (IRQs, DMA channels, I/O ports, and so on). This step is not required when using the board's default settings.
Save your configuration	The ''Save and Exit'' ECU option saves your configuration information to the system's nonvolatile memory.
Return to the SRM console (Digital UNIX and OpenVMS systems only) and restart the system	Refer to step 4 of the Starting the ECU section for operating-system-specific instructions.

Configuring EISA/ISA Options

ISA modules are configured manually, whereas EISA modules are configured through the ECU software (automatically). Refer to Table 4–2 for a summary of steps to configure an EISA bus *that contains both* EISA and ISA options. Review the Before Running the ECU section presented earlier in this chapter. Then run the ECU as described in the Starting the ECU section.

Table 4–2 Summary of Procedure for Configuring EISA Bus with ISA Options

Step	Explanation
Install or move the EISA option. Do not install the ISA boards	Use the instructions provided with the EISA option. ISA boards are installed *after* the configuration process is complete.
Power up and run the ECU	If an EISA option was installed, the ECU will need to locate the CFG file for that option. The CFG file for the option may reside on a configuration diskette packaged with the option or may be included on the System Configuration Diskette.
Add the ISA board to the configuration list	Use the ''Add or Remove Boards'' ECU option to add the CFG file for the ISA option and to select an acceptable slot for the option. The CFG file for the option may reside on a configuration diskette packaged with the option or may be included on the System Configuration Diskette. If the CFG file for the ISA option *cannot* be found, select the generic CFG file for ISA options from the configuration diskette.
View or Edit Details (optional)	The ''View or Edit Details'' ECU option is used to change user-selectable settings or to change the resources allocated for these functions (IRQs, DMA channels, I/O ports, and so on). This step is not required when using the board's default settings.

(continued on next page)

Table 4–2 (Cont.) Summary of Procedure for Configuring EISA Bus with ISA Options

Step	Explanation
Examine and set the required switches to match the displayed settings	The ''Examine Required Switches'' ECU option displays the correct switch and jumper settings that must be physically set for each ISA option. Although the ECU cannot detect or change the settings of ISA boards, it uses the information from the previous step to determine the correct switch settings for these options. Physically set the board's jumpers and switches to match the required settings.
Save your configuration	The ''Save and Exit'' ECU option saves your configuration information to the system's nonvolatile memory.
Return to the SRM console (Digital UNIX and OpenVMS systems only) and turn off the system	Refer to step 4 of the Starting the ECU section for information about returning to the console.
Install the ISA board and turn on the system	Use the instructions provided with the ISA option.

PCI Bus Options

PCI (Peripheral Component Interconnect) is an industry-standard expansion I/O bus that is the preferred bus for high-performance I/O options. Your system supports 32-bit PCI options.

The PCI bus is shown in Figure 4–2. There are eight (8) slots available for 32-bit PCI options in the chassis. A PCI board is shown in Figure 4–4.

Install PCI boards according to the instructions supplied with the option. PCI boards require no additional configuration procedures; the system automatically recognizes the boards and assigns the appropriate system resources.

Warning

Before installing a PCI option, turn off all power to the system (both ac and dc). Refer to the Turning the System Off section in Chapter 3 for information about turning off ac and dc power.

Warning: For protection against fire, only use modules with current-limited outputs.

Figure 4–4 PCI Board

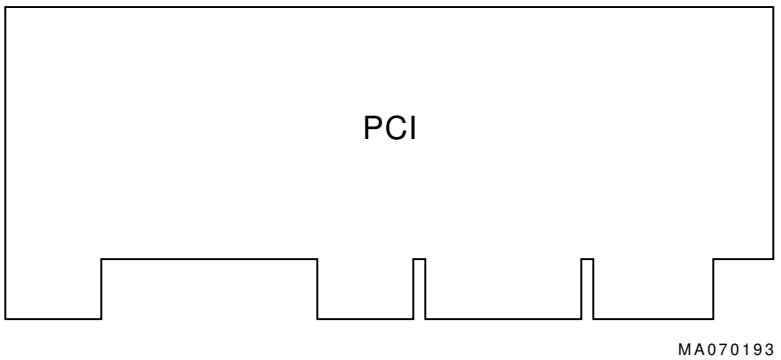

SCSI Buses

A Fast SCSI-2 adapter on the standard I/O module provides a single-ended SCSI bus for the system.

All rackmounted SCSI-2 devices are supported via EISA- or PCI-based SCSI adapters. Use the following rules to determine if a device can be used on your system:

- The device must be supported by the operating system. Consult the software product description or hardware vendor.
- No more than seven (7) devices can be on any one SCSI-2 controller, and each must have a unique SCSI ID.
- The entire SCSI bus length, from terminator to terminator, must not exceed 6.0 m (19.7 ft) for single-ended SCSI-2 at 5 MB/s, or 3.0 m (9.8 ft) for single-ended SCSI-2 at 10 MB/s.

  For the AlphaServer 2100A low-profile system, the internal cabling for the removable-media bus is 2.0 m (6.6 ft).

Native SCSI Bus

The Fast SCSI-2 adapter on the standard I/O module supports one RZ28 hard disk drive and one 5.25-inch removable-media device. This internal SCSI bus does not support external devices.

Installing the 5.25-Inch Removable-Media Device

Warning

Before installing a storage device, turn off all power to the system (both dc and ac). Refer to the Turning the System Off section in Chapter 3 for information about turning off dc and ac power.

To install a removable-media device, refer to Figure 4–5 through Figure 4–7 and proceed as follows:

1. Extend the chassis for service as described in the Extending the Chassis for Service section in Chapter 6.
2. Remove the operator control panel cover as described in the Operator Control Panel Cover section in Chapter 6 (see Figure 4–5 ❶).
3. Remove the front cover as described in the Front Cover section in Chapter 6 (see Figure 4–5 ❷).
4. Remove the two nuts ❸ that secure the metal insert ❹ in the removable-media opening on the front bezel ❺, and remove the insert (see Figure 4–5).
5. Remove the four screws ❻ that secure the removable-media installation opening cover plate ❼ to the front cover (see Figure 4–5).
6. Set the removable-media device's node ID so that there are no duplicate node IDs, as each device must have a unique node ID. Nodes 0–6 are available for drives, and node 7 is reserved for the host adapter. Refer to the device documentation on how to set the node ID on the device.
7. Install the terminator resistor packs on the rear of the removable-media device.

Figure 4–5 Installing the Removable-Media Device

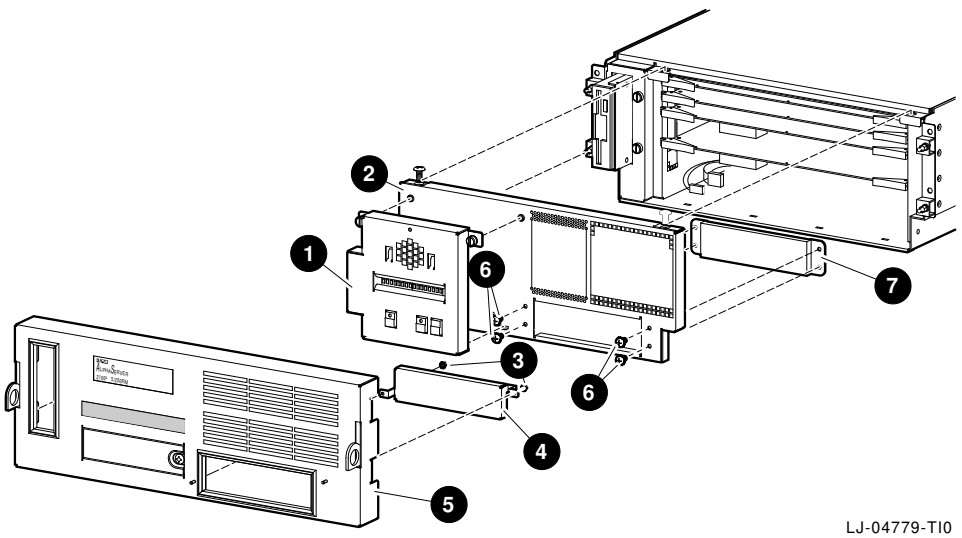

8. Slide the removable-media device into the open end of the drive enclosure ❶ (see Figure 4–6).
9. Secure the removable-media device in the enclosure with four screws ❷ (see Figure 4–6).
10. Attach the removable-media device and the drive enclosure to the front cover ❸ with four screws ❹ (see Figure 4–6). Ensure that the front of the drive enclosure fits over the top lip and under the bottom lip of the front cover opening.

Figure 4–6 Sliding the Device into Enclosure and Mounting to Front Cover

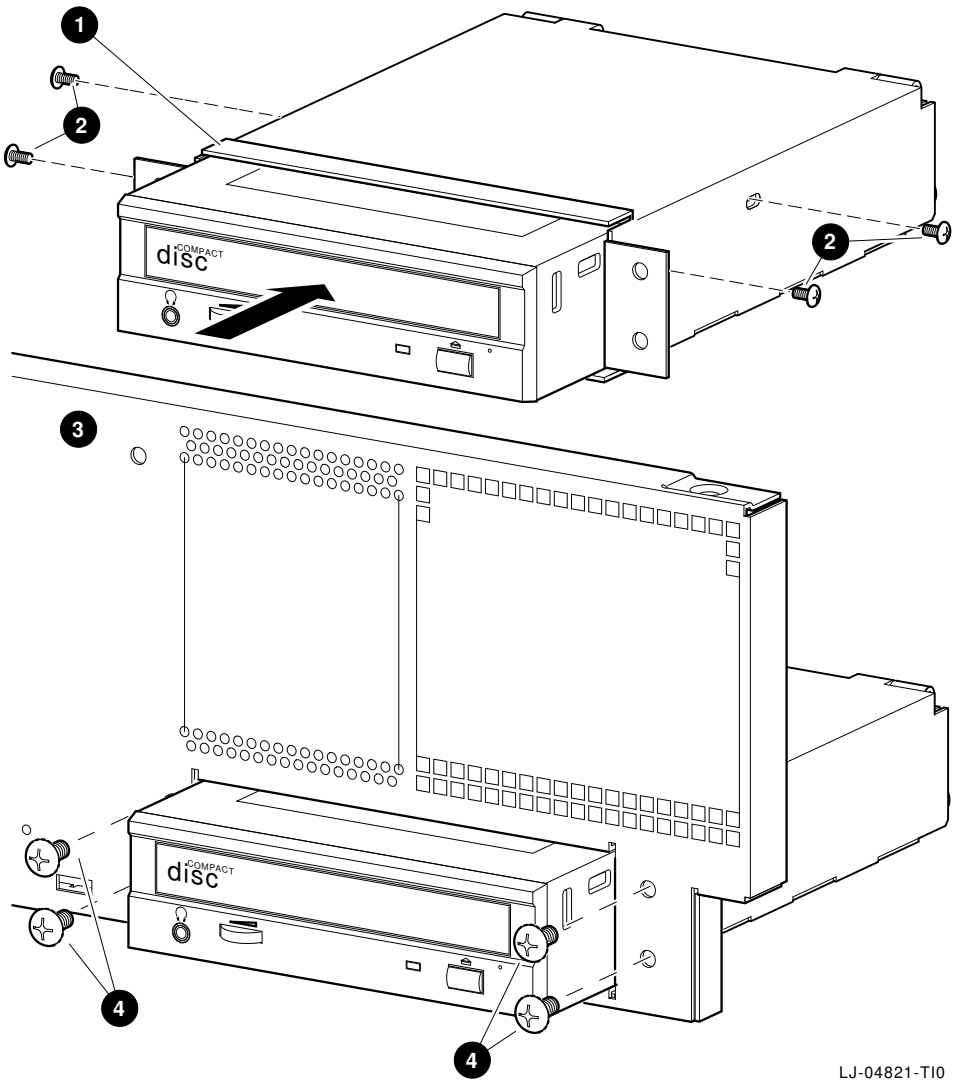

11. Loosen the two captive screws ❶ on the rear cover of the drive enclosure and open the cover (see Figure 4–7).
12. Remove the terminator from the data cable and connect the data cable ❸ and the power cable ❷ to the rear of the removable-media device (see Figure 4–7).
13. Close the rear cover of the drive enclosure, ensuring that the data and power cables fit in the notched openings of the cover, and tighten the two captive screws.
14. Reinstall the front cover.
15. Reinstall the operator control panel cover.
16. Secure the chassis in the cabinet.

Figure 4–7 Opening Rear Cover of Enclosure and Connecting Data and Power Cables

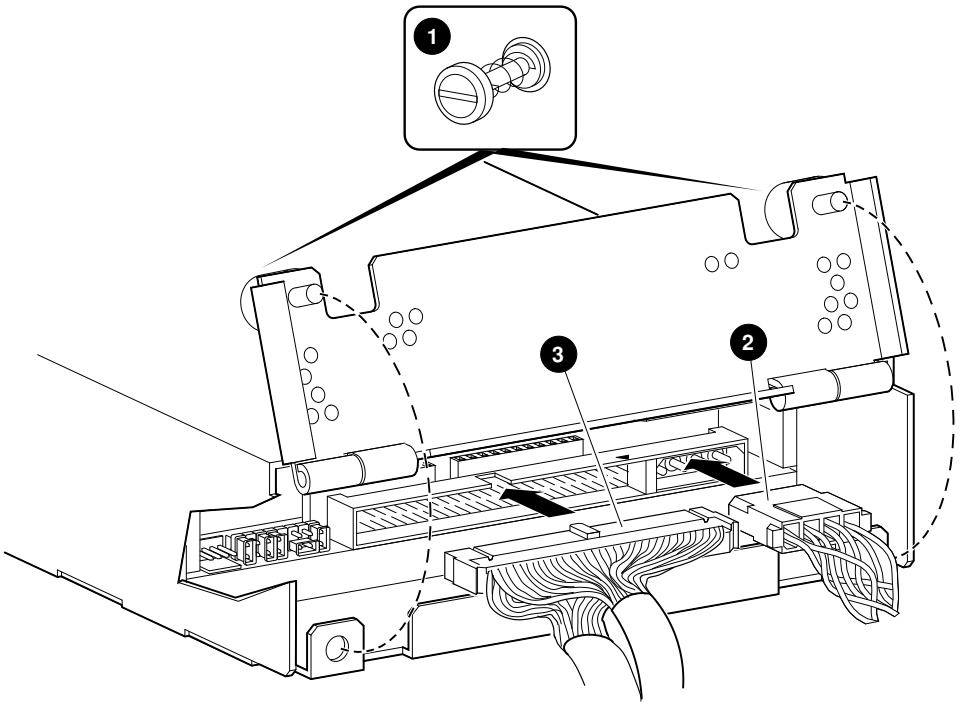

Installing Internal DSSI Cables

Internal DSSI Cable for EISA-to-DSSI Adapters

EISA-to-DSSI adapters provide a DSSI bus for EISA-based systems. The number of adapters that can be installed in a single system is only limited by the configuration rules and the number of available EISA bus slots.

These adapters can be configured as an end-node, with a single host on a bus, or as a middle-node in a DSSI VMScluster.

End-node configurations *do not require* the installation of the internal DSSI cable to provide a second DSSI connection to a SCSI-2 port at the rear of the system.

Middle-node configurations *require* the installation of the internal DSSI cable to provide a second DSSI connection to a SCSI-2 port at the rear of the system.

Installing the Internal DSSI Cable

To install the internal DSSI cable, refer to Figure 4–8 and the following procedure:

1. Orient the end of the cable ❶, as shown in the top panel of Figure 4–8, so that it aligns with the adapter connector, and insert the cable onto this connector.
2. Route the other end of the cable over the top of the other cards to the right side of the chassis, as shown in the top panel of Figure 4–8, to a SCSI-2 port ❷ knockout at the rear of the chassis.
3. Remove the knockout from the SCSI-2 port ❸ that is to be used.
4. Insert the cable connector ❹ into the SCSI-2 port and fasten it with the screws ❺ provided as shown in the bottom panel of Figure 4–8.

Figure 4–8 Installing the Internal DSSI Cable

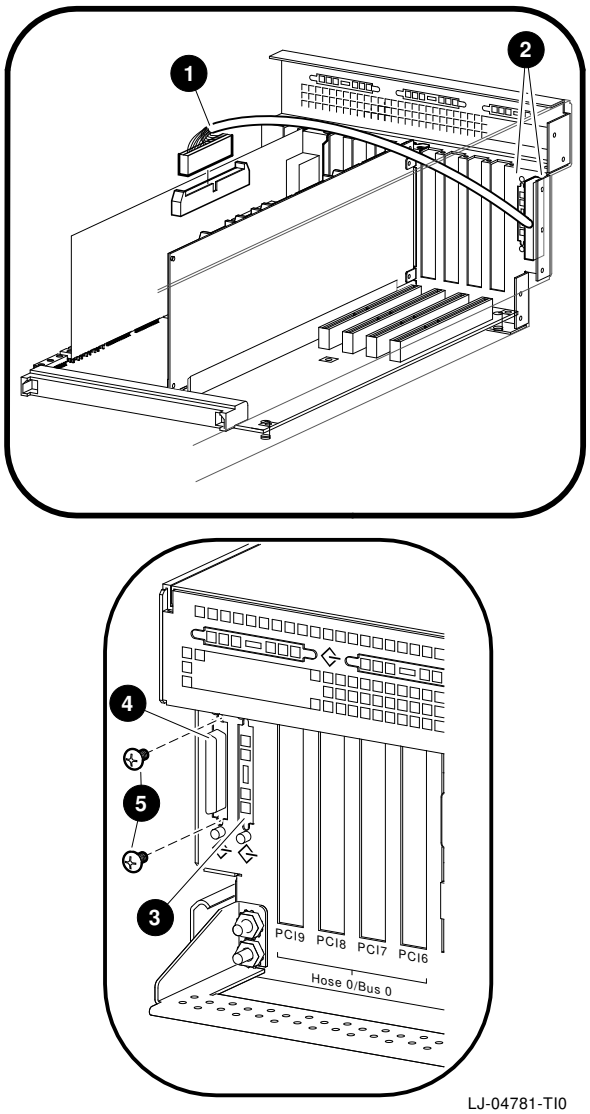

Console Port Configurations

Power-up information is typically displayed on your console terminal. Your console terminal may be either a graphics terminal or a serial terminal (one that is connected to your system through the COM1 serial communication port). The setting of the `console` environment variable determines where the system displays power-up output. Set this environment variable according to the console terminal that you are using.

Synopsis:

set console output_device

Arguments:

graphics	Displays the power-up output to a graphics terminal or to a device connected to the VGA module at the rear of the system.
serial	Displays the power-up output to a device connected to the COM1 serial communication port at the rear of the system.

Example:

```
P00>>> set console serial
P00>>>
```

5

Troubleshooting the System

In This Chapter

This chapter provides troubleshooting information and covers the following topics:.

- Determining the Service Provider
- Task Overview
- Determining the Type of Problem
- Reporting Problems
- Power Problems
- Problems Getting to Console Mode
- Interpreting the OCP Power-Up/Diagnostic Display
- Console Reported Problems
- Mass-Storage Problems Indicated at Power-Up
- EISA Bus Problems Indicated at Power-Up
- PCI Bus Problems Indicated at Power-Up
- Boot Problems
- Operating System Reported Problems
- Fail-Safe Loader

Determining the Service Provider

Determine the Service Provider

Before servicing the system, be aware of any service agreement that exists for your system. The agreement helps determine the level of maintenance for self-maintenance customers.

- For self-maintenance customers, use the information in this chapter to help identify and resolve the problem.
- If there is a service agreement with Digital, contact your Digital service representative for assistance.

Considerations Before Troubleshooting

Before troubleshooting any system problem, check the site maintenance log for the system's service history. Be sure to ask the system manager the following questions:

- Has the system been used before and did it work correctly?
- Have changes to hardware or updates to firmware or software been made to the system recently?
- What is the state of the system—is the operating system running?

  If the operating system is down and you are not able to bring it up, use the console environment diagnostic tools, such as the power-up/diagnostic displays and ROM-based diagnostics (RBD)s.

  If the operating system is running, use the operating system environment diagnostic tools, such as error logs, crash dumps, and exercisers (DEC VET).

Identifying Problems

Table 5–1 lists ways to identify problems and indicates where each method is described.

Table 5–1 How to Identify a Problem

Method	Reference
Using the troubleshooting tables	This chapter
Running diagnostic tests	`test` command in the test section, or `show fru` command as shown in the Console Reported Problems section. Both are in this chapter.

Note

If you are running Windows NT, you must switch from the ARC to the SRM console before you can run the `test` command. For information about switching to the SRM console, refer to Chapter 3 in the *AlphaServer 2000/2100 /2100A Firmware Reference Guide* (EK-AXPFW-RM).

Task Overview

Identifying and Resolving Problems

Table 5–2 describes the steps required to identify and resolve system problems.

Table 5–2 Identifying and Resolving Problems

Step	Description
1	Determine the type of problem.
2	Locate the problem in the troubleshooting tables.
3	Follow the suggested actions to resolve the problem.
4	If necessary, run the diagnostic tests.
5	Contact your Digital service representative or other maintenance provider.

The next sections describe these steps in detail.

Determining the Type of Problem

Types of System Problems

Determine the type of problem that your system is experiencing from the list in Table 5–3.

Table 5–3 Problem Reference

Problem	Section
The system powers down unexpectedly or does not power up	Power Problems
The power-up screens are not displayed on the console terminal	Problems Getting to Console Mode
The power-up screens report an error or do not complete	Console Reported Problems
The system cannot find the boot device or the device does not boot	Boot Problems
The operating system startup screen does not appear, software applications do not run, or the operating system reports an error	Operating System Reported Problems

If the system has a problem that is not listed in Table 5–3 or the corrective actions in the troubleshooting tables do not resolve the problem, refer to the Reporting Problems section in this chapter.

Reporting Problems

Precall Checklist

If you are unable to locate the system problem as outlined in Table 5–3, or the corrective actions suggested in the troubleshooting tables in this chapter do not resolve the problem, contact the nearest Digital support center. Before calling to report a problem, complete the following steps:

1. Locate the part and serial numbers printed on the label at the rear of your system. Record these numbers on a copy of the AlphaServer 2100A LP System Problem Worksheet in this chapter.

   Record the revision of the operating system, the SRM console, and the ARC console.

   For option problems, use the `show config` command to obtain option revisions.

   The Digital support center will need this information when you call.

2. Fill in the Status of the System information on the worksheet.

3. Note the problem, any known possible causes, and the corrective actions suggested in the troubleshooting tables. Also indicate what corrective actions (if any) have already been taken to try to resolve the problem.

4. Be prepared to read information from the screen and to enter commands at the keyboard while you talk to the Digital support center representative.

Digital Support Center Contact Numbers

Table 5–4 lists the telephone numbers for contacting your Digital support center.

If your Digital support center number is not listed in Table 5–4, contact your local Digital office for assistance.

Table 5–4 Digital Support Centers

Country	Telephone Number
UNITED STATES	1-800-354-9000
Colorado Springs, CO	
From U.S./Canada/Mexico	719-592-7000
Shrewsbury, MA	
From U.S./Canada/Mexico	508-841-3700
Alpharetta, GA	
From U.S./Canada/Mexico	404-343-0000
AUSTRALIA	31-2-5615252
AUSTRIA	0222-86630-555
BELGIUM	02-7297744
CANADA	
English	1-800-267-5251
French	1-800-267-2603
DENMARK	80301005
FINLAND	90 9800 2878
FRANCE	1-69874123
GERMANY	01307702
HONG KONG	852-4149779
ISRAEL	052-592-300
ITALY	2-1678 20062
JAPAN (Tokyo)	
Trouble	0120-113035 (toll-free)
SPS Telephone Support	0120-113036 (toll-free)
Commodity Products Phone	0120-206042 (toll-free)
Special Account Customers	0120-113334 (toll-free)
Windows NT Hot Line	03-3207-2881

(continued on next page)

Table 5–4 (Cont.) Digital Support Centers

Country	Telephone Number
KOREA	82-2-7991114
MALAYSIA	60-3-2300111
MEXICO	520140810017
NETHERLANDS	030-832888
NORTHERN IRELAND	0232 381381
NORWAY	02-256300
PHILIPPINES	623-810-5156
PORTUGAL	
LISBON	01-3877051
OPORTO	02-6068805
PUERTO RICO	800-981-4764
REPUBLIC OF IRELAND	01-381216
SINGAPORE	330-6225
SPAIN	
MADRID	34-(9)1-5834257
BARCELONA	34-(9)3-4012222
SWEDEN	08-988835
THAILAND	66-254-8191
UNITED KINGDOM	025 6-59200

AlphaServer 2100A LP System Problem Worksheet

Digital service representative telephone number: _____

Serial Number: _____

Status of the System (check all that apply):

_____ DC power light is not on

_____ OCP power/diagnostic display failure message

_____ Operating system fails to boot

_____ Console program fails to boot

_____ Console error message

_____ Diagnostic test error message

OCP powerup/diagnostic display:

_____

_____

Screen error message:

_____

_____

_____

_____

Troubleshooting notes:

_____

_____

_____

_____

_____

_____

_____

LJ-03805-TI0E

Power Problems

This section describes how to troubleshoot the system when there is no power at the system enclosure or the power supply subsystem lights indicate power trouble.

Table 5–5 describes possible power problems and their corrective actions.

Table 5–5 Diagnostic Flow for Power Problems

Symptom	Corrective Action
AC power is present, but the system does not power on.	Check the DC On/Off button setting on the OCP.
	Check that the ambient room temperature is within the environmental specifications (10°C–35°C, 50°F–95°F).
The power supply shuts down after approximately ten (10) seconds.	Check to see if the system fan is operating. A failure of the system fan causes the system to shut down after approximately ten (10) seconds.

Problems Getting to Console Mode

This section describes how to troubleshoot the system when powering up the system, but the console terminal does not display the power-up screen.

Table 5–6 describes possible problems getting to console mode and their corrective actions.

Table 5–6 Diagnostic Flow for Problems Getting to Console Mode

Symptom	Corrective Action
The power-up screen is not displayed.	Check the power-up/diagnostic display on the OCP (refer to Table 5–7) for a failure during self-tests. Check that the keyboard and monitor are properly connected and powered on (refer to the Terminal Connections section in Chapter 2). If the power-up screen is not displayed, yet the system enters console mode, check that the console environment variable is set correctly. If a VGA console terminal is used, set the variable to graphics. If a serial terminal is used, set the variable to serial. If `console` is set to serial, the power-up screen is routed to the COM1 serial communication port (refer to the `set console` command in Chapter 1 in the *AlphaServer 2000/2100/2100A Firmware Reference Guide* (EK-AXPFW-RM)) and cannot be viewed from the VGA monitor. Try connecting a console terminal to the COM1 serial communication port (refer to the Terminal Connections section in Chapter 2). If necessary use a 9-pin connector. Check the baud rate setting for the console terminal and system. The system baud rate setting is 9600. When using the COM1 port, set the `console` environment variable to ‘‘serial.’’

Interpreting the OCP Power-Up/Diagnostic Display

Table 5–7 describes how to interpret messages that may be displayed on the power-up/diagnostic display located on the operator control panel on the front of the system (shown in Figure 1–3).

Table 5–7 Interpreting the OCP Power-Up/Diagnostic Display

Message	Meaning
TEST	This is displayed while the system performs diagnostic tests and exercisers. The type of module under test, its slot number, and the currently executing test number are also displayed.
FAIL	If an error is detected, a failure message is displayed (and the Halt button LED lights) for a few seconds. The error is logged to the appropriate module via the serial control bus. In nearly all cases, the power-up tests continue. The module type and the slot number for the field replaceable unit (FRU) that failed is also displayed. The module types and slot numbers are as follows: CPU*nn* — CPU modules (0, 3) MEM*nn* — Memory modules (0–2) I/O_0 — Standard I/O module
CPU STATUS	Summary of CPU testing—The status of each CPU from left to right, starting with CPU0 is displayed: ‘‘P’’ — CPU passed ‘‘F’’ — CPU failed ‘‘–’’ — CPU not present
STARTING CPU #	The console is starting the primary CPU.
SYSTEM RESET	The Reset button has been pressed.
Alpha *nnn*MHz	When the system is under operating system control, the CPU speed is displayed unless your own text is supplied using the ocp_text environment variable.

Console Reported Problems

This section describes how to troubleshoot the system when self-tests do not complete or when error messages are displayed on your console terminal in console mode.

Table 5–8 describes possible problems reported by the console program and their corrective actions.

Table 5–8 Diagnostic Flow for Problems Reported by the Console Program

Symptom	Corrective Action
The power-up tests do not complete.	Use the power-up/diagnostic display on the OCP (refer to Table 5–7).
The system powers up to the `ash>` prompt.	Reinstall the firmware. Refer to the firmware update documentation for firmware installation instructions. Contact your Digital support center if there is no backup copy of the firmware.
The console program reports an error.	Use the power-up/diagnostic display on the OCP (refer to Table 5–7) to determine the error.
• The OCP displays failure message at power-up	Use the `show fru` command described in the next section to see if errors have been logged.
• The Halt button LED lights during power-up	Examine the console event log (enter the `cat el` command) or power-up screens to check for embedded error messages recorded during power-up.
• The power-up screen includes error messages	If the power-up screens or the console event log indicate problems with mass-storage devices, or if the storage devices are missing from the `show config` display, use the troubleshooting flowcharts (refer to Table 5–9 and Table 5–10) to determine the problem.
	If the power-up screens or the console event log indicate problems with the EISA devices, or if the EISA devices are missing from the `show config` display, use the troubleshooting flowchart (refer to Table 5–11) to determine the problem.

(continued on next page)

Table 5–8 (Cont.) Diagnostic Flow for Problems Reported by the Console Program

Symptom	Corrective Action
	If the power-up screens or the console event log indicate problems with the PCI devices, or if the PCI devices are missing from the `show config` display, use the troubleshooting flowchart (refer to Table 5–12) to determine the problem. Run the `test` command (refer to the test section in this chapter) to verify the problem.

show fru

The `show fru` command reports module and error information for the following field replaceable units based on the serial control bus EEPROM data:

- CPU modules
- Memory modules
- I/O modules

For each of the above modules, the slot position, option, part, revision, and serial numbers, as well as any reported symptom-directed diagnostics (SDD) and test-directed diagnostics (TDD) event logs are displayed.

In addition, installed PCI and EISA modules are displayed with their respective slot numbers.

Synopsis:

show fru

Example:

```
P00>>> show fru
  ❶    ❷      ❸              ❹        ❺              ❻

                                Rev                    Events logged
 Slot   Option  Part#          Hw Sw   Serial#         SDD     TDD
   0    IO      24389-01       A3 0    KA24534546      00      00
   1    EXTIO   24403-01       A3 0    KA12345678      00      00
   2    CPU0    B2040-AA       B1 34   KA521AEAPE      00      01
   5    CPU3    B2040-AA       B1 34   KA506SALA9      00      01
   4    MEM0    B2021-CA       B1 0    AY41123803      00      01
   6    MEM2    B2021-CA       B1 0    AY40912084      00      00

 Slot   Option                 Hose 0, Bus 2, PCI on Primary I/O

 Slot   Option                 Hose 0, Bus 0, PCI on Primary I/O
   7    DEC KZPSA                                      PCI Option Slot 5

 Slot   Option                 Hose 0, Bus 1, EISA on Primary I/O
   1    DE425
   2    Compaq Qvision

 Slot   Option                 Hose 1, Bus 0, PCI on Secondary I/O
   6    DEC KZPSA                                      PCI Option Slot 0
   8    DECchip 21040-AA                               PCI Option Slot 2
P00>>>
```

❶ Slot number for module

For the I/O section of the display (the lower portion), this column determines the location of the module in question. For example, the PCI Ethernet option module (DECchip 21040-AA) is located in Hose 1, Bus 0, slot 8. Ignore the PCI option slot information displayed in column 6.

For the system bus and standard I/O section of the display (the upper portion), the slot numbers are for reference purposes only. Refer to Figure 4–2 to locate the CPU, memory, and standard I/O modules.

❷ Option name (I/O, CPU#, or MEM#)

❸ Part number of option

❹ Revision numbers (hardware and firmware)

❺ Serial number

❻ Events logged:

Numbers other than ‘‘00’’ indicate that errors have been logged.

- SDD: Number of symptom-directed diagnostic events logged by the operating system, or in the case of memory, by the operating system and firmware diagnostics.
- TDD: Number of test-directed diagnostic events logged by the firmware diagnostics.

test

The `test` command runs firmware diagnostics for the entire ‘‘core’’ system. The tests are run sequentially and the status of each subsystem test is displayed on the console terminal as the tests progress. If a particular device is not available to test, a message is displayed.

Note

By default, no write tests are performed on disk and tape drives. Media must be installed to test the floppy drive and tape drives.

The `test` script tests devices in the following order:

1. Memory tests (one pass)
2. Read-only tests: DK* disks, DR* disks, DU* disks, MK* tapes, DV* floppy
3. Console loopback tests if lb argument is specified: COM2 serial port and parallel port
4. VGA console tests—These tests are run only if the VGA terminal is not used as the console terminal; that is, the console environment variable is set to ''serial.''
5. Network external loopback tests for EWA0—This test requires that the Ethernet port be terminated or connected to a live network, otherwise, the test will fail.

Synopsis:

test [lb]

Argument:

[lb]	The loopback option includes console loopback tests for the COM2 serial port and the parallel port during the test sequence.

Example:

```
P00>>> test
 2:32:12  March 4, 1994
Testing the Memory
Testing the DK* Disks(read only)
dkb600.6.0.2.1 has no media present or is disabled via the
RUN/STOP switch
file open failed for dkb600.6.0.2.1
No DR* Disks available for testing
Testing the MK* Tapes(read only)
Testing the DV* Floppy Disks(read only)
file open failed for dva0.0.0.0.1
Testing the VGA(Alphanumeric Mode only)
Testing the EW* Network
 2:33:15  March 4, 1994
P00>>>
```

Mass-Storage Problems Indicated at Power-Up

Mass-storage failures at power-up are usually indicated by read fail messages. Other problems can result in storage devices missing from the `show config` display.

Table 5–9 provides information for troubleshooting fixed-media mass-storage problems indicated at power-up.

Table 5–10 provides information for troubleshooting removable-media mass-storage problems indicated at power-up.

Use these tables to diagnose the likely cause of the problem.

Table 5–9 Fixed-Media Mass-Storage Problems

Problem	Symptom	Corrective Action
A drive failure	The fault LED for the drive is on (steady).	Replace the drive.
There are duplicate SCSI ID(s) (when removable-media bus is extended to StorageWorks shelf)	The drives with duplicate SCSI IDs are missing from the `show config` display.	Correct the removable-media SCSI IDs.
The SCSI ID(s) is set to 7 (reserved for host ID)	The valid drives are missing from the `show config` display. One drive may appear seven (7) times on the `show config` display.	Correct the SCSI IDs.
There are duplicate host ID(s) on a shared bus.	The valid drives are missing from the `show config` display. One drive may appear seven (7) times on the `show config` display.	Change the host ID(s) using the `set pk*0_host_id` command described in Chapter 1 in the *AlphaServer 2000 /2100/2100A Firmware Reference Guide* (EK-AXPFW-RM).
An I/O module failure (if removable-media bus is extended to StorageWorks shelf) or PCI or EISA storage adapter option failure	Problems persist after eliminating the previous problem sources.	Replace the standard I/O or storage adapter module.

Table 5–10 Removable-Media Mass-Storage Problems

Problem	Symptom	Corrective Action
A drive failure	The fault LED for the drive is on (steady).	Replace the drive.
There are duplicate SCSI ID(s)	The drives with duplicate SCSI IDs are missing from the `show config` display.	Correct the SCSI IDs.
The SCSI ID(s) is set to 7 (reserved for host ID)	The valid drives are missing from the `show config` display. One drive may appear seven (7) times on the `show config` display.	Correct the SCSI IDs.
There are duplicate host ID(s) on a shared bus	The valid drives are missing from the `show config` display. One drive may appear seven (7) times on the `show config` display.	Change the host ID(s) using the `set pk*0_host_id` command described in Chapter 1 in the *AlphaServer 2000 /2100/2100A Firmware Reference Guide* (EK-AXPFW-RM).
There are missing or loose cables	The activity LEDs do not come on. The drive is missing from the `show config` display.	Remove the device and inspect the cable connections.
A terminator(s) is missing	There are read/write errors in the console event log; the storage adapter port may fail.	Attach terminators as needed: internal SCSI terminator (12-41296-01) or external SCSI terminator (12-37004-04).
There is an extra terminator(s)	Devices produce errors or device IDs are dropped.	Check that only the beginning and the end of the SCSI bus is terminated. Remove the unnecessary terminators.
There is an I/O module failure	Problems persist after eliminating the previous problem sources.	Replace the standard I/O module.

EISA Bus Problems Indicated at Power-Up

EISA bus failures at power-up are usually indicated by the following messages displayed during power-up:

```
EISA Configuration Error. Run the EISA Configuration
Utility.
```

Run the ECU (refer to the Configuring EISA and ISA Options section in Chapter 4) when such a message is displayed. Other problems are indicated by EISA devices missing from the `show config` display.

Table 5–11 provides information for troubleshooting EISA bus problems that persist after running the ECU. Use Table 5–11 to diagnose the likely cause of the problem.

Table 5–11 EISA Troubleshooting

Step	Corrective Action
1	Confirm that the EISA module and any cabling are properly seated.
2	Run the ECU to: • Confirm that the system has been configured with the most recently installed controller. • See what the hardware jumper and switch setting should be for each ISA controller. • See what the software setting should be for each ISA and EISA controller. • See if the ECU deactivated (<>) any controllers to prevent a conflict. • See if any controllers are locked (!), which limits the ECU's ability to change resource assignments.
3	Confirm that the hardware jumpers and switches on ISA controllers reflect the settings indicated by the ECU. Start with the last ISA module installed.
4	Check for a bad slot by moving the last installed controller to a different slot.
5	Call the option manufacturer or the Digital support center for help.

Additional EISA Troubleshooting Tips

The following tips can aid in isolating EISA bus problems:

- Peripheral device controllers need to be seated (inserted) carefully, but firmly, into their slot to make all necessary contacts. Improper seating is a common source of problems for EISA modules.
- The CFG files supplied with the option that you want to install may not work on the AlphaServer 2100A low-profile system. Some CFG files call overlay files that are not required on this system or may reference inappropriate system resources, for example, BIOS addresses. Contact the option vendor to obtain the proper CFG file.
- Peripherals cannot share direct memory access (DMA) channels. Assignment of more than one peripheral to the same DMA channel can cause unpredictable results or even loss of function of the EISA module.
- Systems running Windows NT can assign shared interrupt lines (IRQs). Digital UNIX and OpenVMS do not allow shared interrupts.
- Not all EISA products work together. EISA is an open standard, and not every EISA product or combination of products can be tested. Violations of specifications may not matter in some configurations, but do matter in others.

  Manufacturers of EISA options often test the most common combinations and may have a list of ISA and EISA options that do not function in combination with particular systems. Be sure to check the documentation or contact the option vendor for the most up-to-date information.
- EISA systems will not function unless they are first configured using the ECU.
- The ECU will not notify you if the configuration program diskette is write-protected when it attempts to write the system configuration file (system.sci) to the diskette.

PCI Bus Problems Indicated at Power-Up

PCI bus failures at power-up are usually indicated by the inability of the system to see the device. Use Table 5–12 to diagnose the likely cause of the problem.

Table 5–12 PCI Troubleshooting

Step	Corrective Action
1	Confirm that the PCI module and any cabling are properly seated.
2	Check for a bad slot by moving the last installed controller to a different slot.
3	Call the option manufacturer or the Digital support center for help.

Boot Problems

This section describes how to troubleshoot problems that occur while the system is booting the operating system software.

Table 5–13 describes possible problems during booting and their corrective actions.

Table 5–13 Diagnostic Flow for Boot Problems

Symptom	Corrective Action
The system cannot find the boot device.	Check the system configuration for the correct device parameters (refer to the Verifying System Configuration section in Chapter 4) (node ID, device name, and so on) and the environment variables (refer to the boot section in Chapter 1 in the *AlphaServer 2000/2100/2100A Firmware Reference Guide* (EK-AXPFW-RM)), such as bootdef_dev, boot_file, and boot_osflags for Digital UNIX and OpenVMS; and FWSEARCHPATH, AUTOLOAD, and COUNTDOWN for Windows NT.
The device does not boot.	Run the `test` command (refer to the test section in this chapter) to check that the boot device is operating.

Operating System Reported Problems

This section describes how to troubleshoot system problems that occur while the operating system software is up and running.

Table 5–14 describes possible operating system problems and their corrective actions.

Table 5–14 Diagnostic Flow for Errors Reported by the Operating System

Symptom	Corrective Action
The system is hung or has crashed.	Examine the crash dump file. Refer to the *OpenVMS Alpha System Dump Analyzer Utility Manual* (AA-PV6UB-TE) for information on how to interpret OpenVMS crash dump files. Refer to the *Guide to Kernel Debugging* (AA-PS2TA-TE) for information on using the Digital UNIX Krash Utility.
The operating system is up.	Have the Digital support center examine the operating system error log files to isolate the problem. If the problem occurs intermittently, have the Digital support center run an operating system exerciser, such as the DEC VET, to stress the system. Refer to the *DEC Verifier and Exerciser Tool User's Guide* (AA-PTTMA-TE) for instructions on running DEC VET.

Fail-Safe Loader

The fail-safe loader (FSL) allows you to power-up without initializing drivers running power-up diagnostics.

Note

The fail-safe loader should be used only when a failure at power-up prohibits you from getting to the console program. You cannot boot an operating system from the fail-safe loader.

If a checksum error is detected when loading the SRM console at power-up, the fail-safe loader is automatically loaded into memory and the system displays the FSL prompt `ash>`. If the system automatically powers up to the `ash>` prompt, reinstall the firmware according to the instructions provided with the firmware.

Whenever the fail-safe loader console is activated, the power-up/diagnostic display on the OCP displays a `FAIL I/O_00` message.

The FSL permits you to get to a console, with limited functionality, when one of the following is the cause of a problem getting to the console program under normal power-up:

- A power failure or accidental power-down during a firmware upgrade
- An error in the nonvolatile nvram file
- An incorrect environment variable setting
- A driver error

Note

The FSL program, indicated by the `ash>` prompt, has limited functionality (a simple shell is indicated by the letters ‘‘ash’’ contained in the console prompt).

Fail-Safe Loader Functions

From the FSL program, you can:

- Edit the nvram file (using the `edit` command).
- Assign a correct value to an environment variable (using the `show` and `set` commands).
- Start individual drivers using the `init -driver ew` command to start the Maintenance Operations Protocol (MOP) driver or `init -driver dv` to start the floppy driver. The `init -driver 6` command in FSL mode starts all available drivers.

Note

The nonvolatile file, nvram, is shipped from the factory with no contents. The customer can use the `edit` command to create a customized script or command file that is executed as the last step of every power-up.

Activating the Fail-Safe Loader

To activate the FSL, perform the following steps:

1. Install jumper W6 on the standard I/O module (refer to Figure 5–1).
2. Turn on the system.
3. Use the FSL program (indicated by the `ash>` prompt) to make corrections, edit the nvram file, set environment variables, or initialize phase 6 drivers.
4. When you have finished, power-down and remove the FSL jumper.

Caution

Do not perform console upgrades with the W6 jumper installed or the system firmware will be corrupted.

Figure 5–1 Fail-Safe Loader Jumper (W6) on the Standard I/O Module

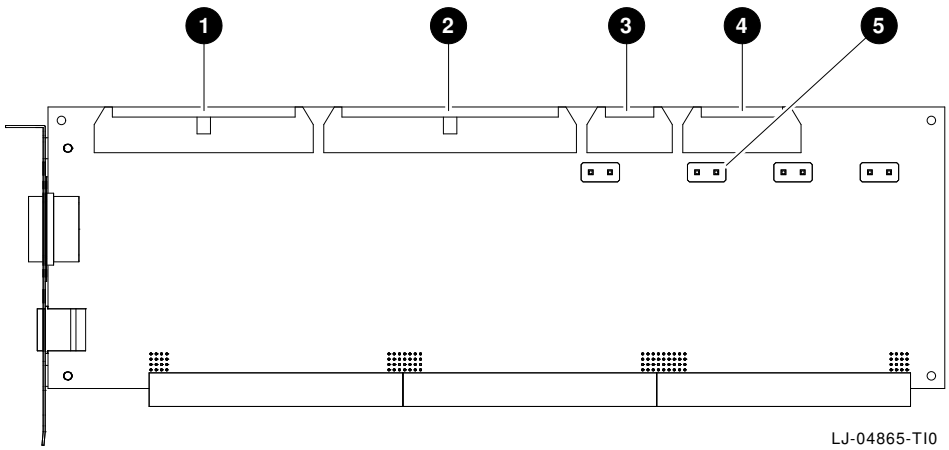

❶ SCSI data cable (50-pin)

❷ Remote I/O cable (60-pin)

❸ OCP cable (10-pin)

❹ Floppy cable (34-pin)

❺ Fail-Safe jumper (W6) location

Note

W6–Fail-Safe: When installed, selects the fail-safe loader firmware.

6

Removal and Replacement

In This Chapter

This chapter contains the procedures for removing and replacing the following major components of the AlphaServer 2100A low-profile system:

- Front Bezel
- Extending the Chassis for Service
- Operator Control Panel Cover
- Operator Control Panel Board
- Front Cover
- CPU and Memory Modules
- Top Cover
- Safety Cover
- RX23L Floppy Drive
- Remote I/O Module
- Fan Assembly
- Fan Speed-Control Module
- Thermal Sensor
- RZ28 Hard Disk Drive
- Power Supply
- System Backplane
- I/O Backplane

Warning

Before servicing the AlphaServer 2100A low-profile chassis, ensure that the DC On/Off button on the OCP is in the OFF position and that the power cord is disconnected from the receptacle on the cabinet power distribution unit or the ac input receptacle on the rear of the chassis.

Tools Required

The following tools are required for servicing the AlphaServer 2100A low-profile system chassis:

- Phillips-head screwdriver
- Flat-blade screwdriver
- Adjustable wrench

Front Bezel

Removal

Perform the following procedure to remove the front bezel from the AlphaServer 2100A low-profile system chassis:

1. Press in at the bottom of the two pull loops ❶ on the front bezel ❷ to rotate them down and out from the bezel (see Figure 6–1).
2. Using the two pull loops, pull the bezel away from the system.

Replacement

To replace the front bezel, refer to Figure 6–1 and proceed as follows:

1. Align the ball-stud receivers on the front bezel with the ball studs on the front of the system.
2. Press the front bezel into place.

Figure 6–1 Removing and Replacing the Front Bezel

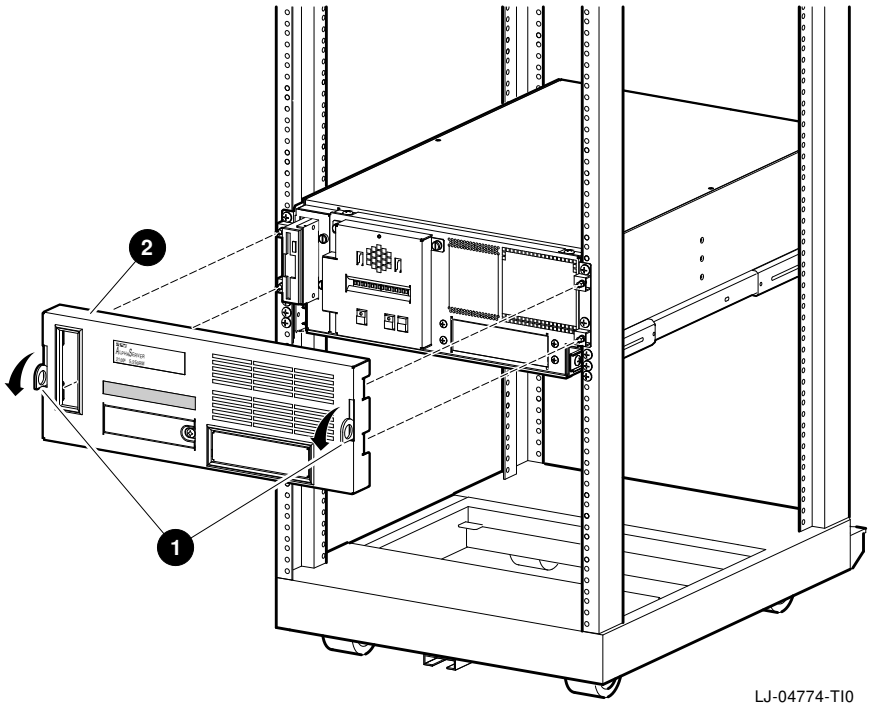

Extending the Chassis for Service

Extending

Warning

Before extending the chassis for service, ensure that the cabinet is stable and that all provided stabilizing features have been activated. The stabilizing features for the rack or cabinet are configuration dependent.

Perform the following procedure to extend the AlphaServer 2100A low-profile system chassis for service:

1. Extend the stabilizing legs ❶ at the front of the cabinet (if stabilizing legs are provided) (see Figure 6–2).
2. Remove the front bezel (see Front Bezel section).
3. Remove the four retaining screws ❷ that secure the chassis to the front rails (see Figure 6–2).

Caution

Check and ensure that all cables are free to follow the chassis before extending the chassis.

4. Carefully pull the chassis forward until the slides lock in the extended position.

Securing

To secure the chassis in the cabinet, press in on the left and right slide locks, and reverse steps 1 through 4 of the extension procedure.

Figure 6–2 Extending the Chassis

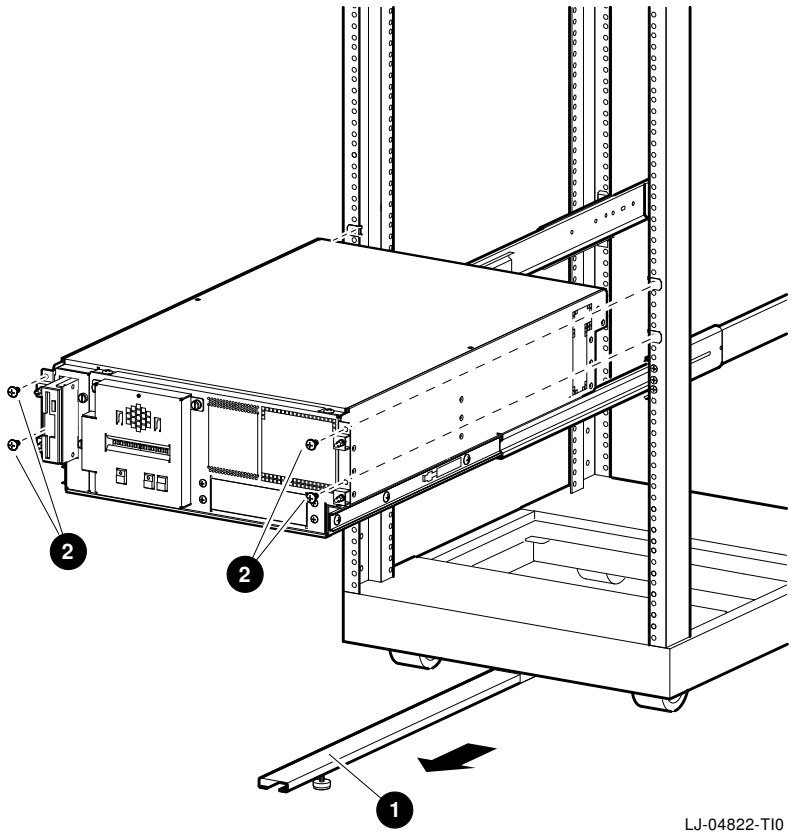

Operator Control Panel Cover

Warning

Before performing the following removal and replacement procedures, ensure that the DC On/Off button on the OCP is in the OFF position and that the power cord is disconnected from the receptacle on the cabinet power distribution unit or the ac input receptacle on the rear of the chassis.

Removal

Perform the following procedure to remove the operator control panel cover:

1. Remove the front bezel (see Front Bezel section).
2. Loosen the two captive screws ❶ that secure the operator control panel cover ❷ to the front cover (see Figure 6–3).
3. Tilt the operator control panel cover out from the front cover and lift the operator control panel cover away from the front cover until the tabs along the bottom edge come out of the slots in the front cover (see Figure 6–3).
4. Disconnect the long ribbon cable ❹ from the short ribbon cable ❸ that comes from the operator control panel board (see Figure 6–3).
5. Disconnect the speaker cable ❺ from the speaker (see Figure 6–3).

Replacement

To replace the operator control panel cover, refer to Figure 6–3 and reverse steps 1 through 5 of the removal procedure.

Figure 6–3 Removing and Replacing the Operator Control Panel Cover

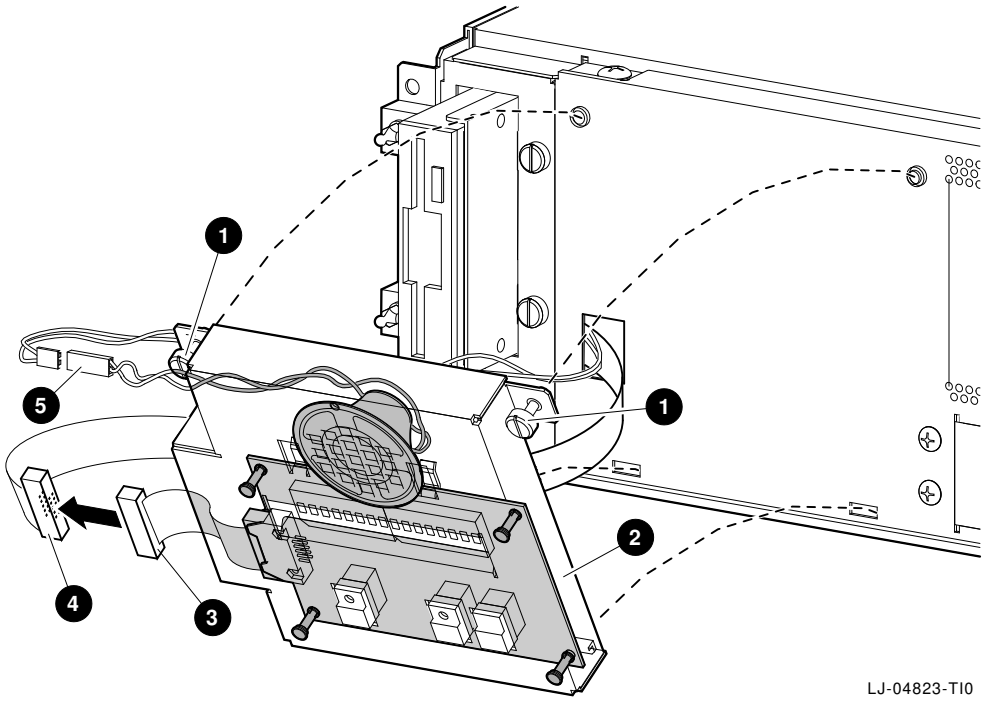

Operator Control Panel Board

Warning

Before performing the following removal and replacement procedures, ensure that the DC On/Off button on the OCP is in the OFF position and that the power cord is disconnected from the receptacle on the cabinet power distribution unit or the ac input receptacle on the rear of the chassis.

Removal

Perform the following procedure to remove the operator control panel board:

1. Remove the front bezel (see Front Bezel section).
2. Remove the operator control panel cover (see Operator Control Panel Cover section).
3. Put on an antistatic wriststrap.

Caution

An antistatic wriststrap *must* be worn when handling any module to prevent damage to the module.

4. Unsnap the operator control panel board from the four standoffs inside the operator control panel cover (see Figure 6–4).
5. Disconnect the short ribbon cable from the operator control panel board (see Figure 6–4).

Replacement

To replace the operator control panel board, refer to Figure 6–4 and reverse steps 1 through 5 of the removal procedure.

Figure 6–4 Removing and Replacing the Operator Control Panel Board

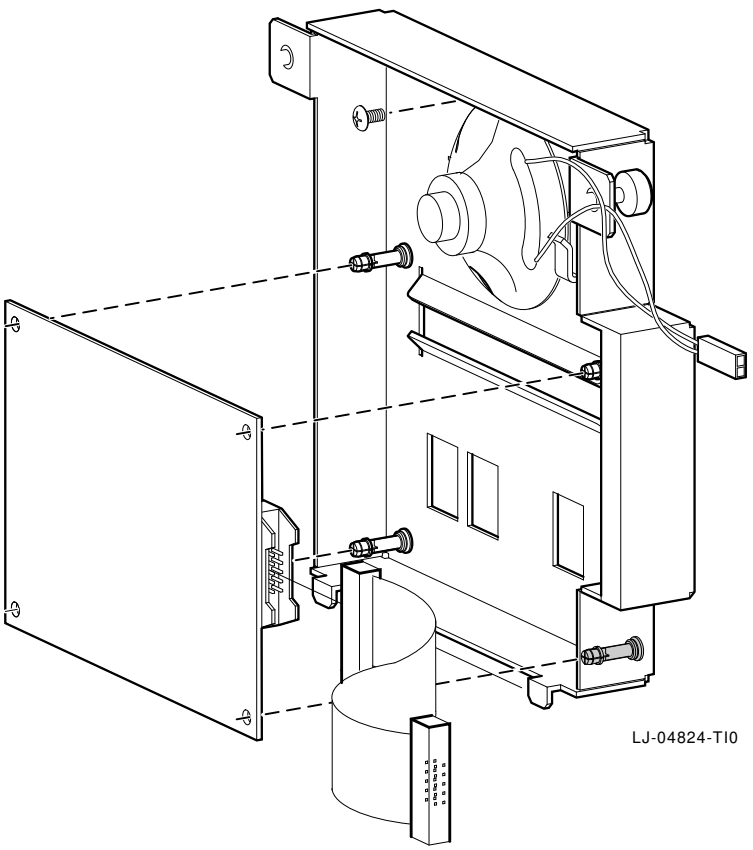

Front Cover

Warning

Before performing the following removal and replacement procedures, ensure that the DC On/Off button on the OCP is in the OFF position and that the power cord is disconnected from the receptacle on the cabinet power distribution unit or the ac input receptacle on the rear of the chassis.

Removal

Perform the following procedure to remove the front cover:

1. Extend the chassis for service (see Extending the Chassis for Service section).
2. Remove the operator control panel cover (see Operator Control Panel Cover section).
3. Remove the two screws ❶ that secure the front cover along the top edge of the chassis (see Figure 6–5).
4. Lift the front cover until the tabs along the bottom edge come out of the slots ❷ in the chassis, and then pull the front cover out and away from the chassis (see Figure 6–5).
5. If an optional removable-media storage device ❸ is installed, disconnect the data and power cables from the rear of the device after removing the front cover.

Replacement

To replace the front cover, refer to Figure 6–5 and reverse steps 1 through 5 of the removal procedure.

Figure 6–5 Removing and Replacing the Front Cover

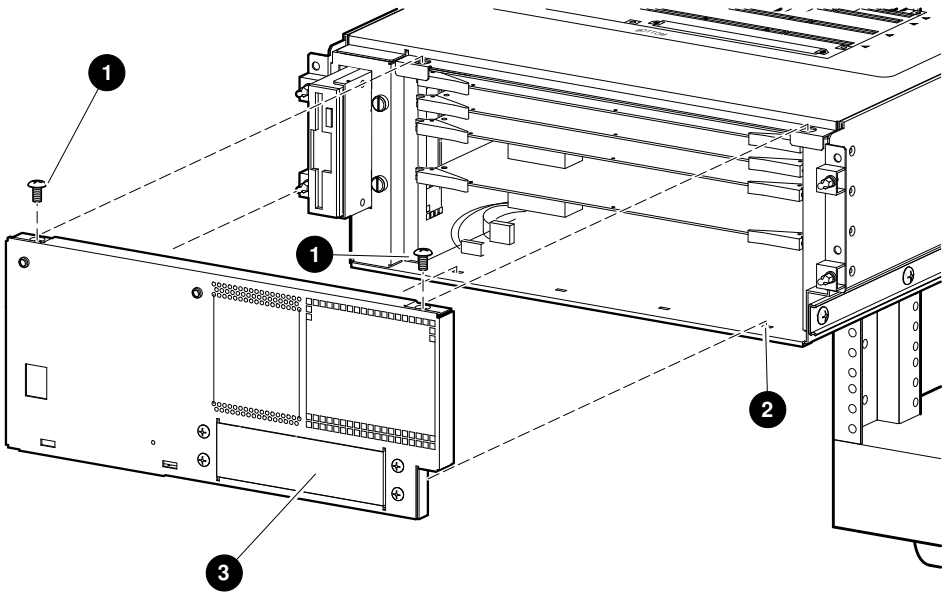

LJ-04869-TI0

CPU and Memory Modules

Warning

Before performing the following removal and replacement procedures, ensure that the DC On/Off button on the OCP is in the OFF position and that the power cord is disconnected from the receptacle on the cabinet power distribution unit or the ac input receptacle on the rear of the chassis.

Warning: CPU and memory modules have parts that operate at high temperatures. Wait two minutes *after* power is removed before handling these modules.

Removal

Perform the following procedure to remove a CPU or memory modules:

1. Extend the chassis for service (see Extending the Chassis for Service section).
2. Remove the operator control panel cover (see Operator Control Panel Cover section).
3. Remove the front cover (see Front Cover section).
4. Put on an antistatic wriststrap.

Caution

An antistatic wriststrap *must* be worn when handling any module to prevent damage to the module.

5. Pull out on the levers at each end of the module that is to be removed (see Figure 6–6).
6. Pull the module out of the card cage (see Figure 6–6).

Replacement

To replace a CPU or memory module, refer to Figure 6–6 and reverse steps 1 through 6 of the removal procedure.

Figure 6–6 Removing and Replacing the CPU and Memory Modules

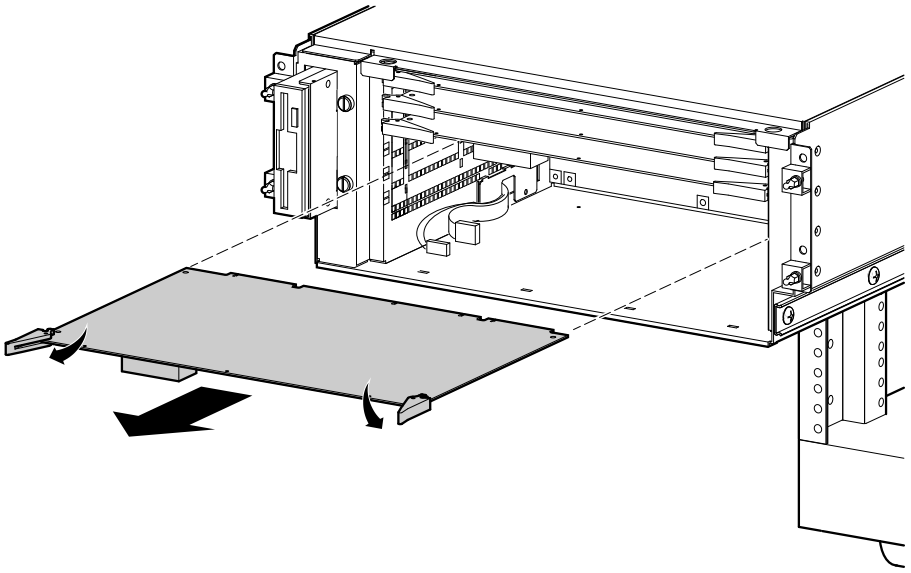

LJ-04825-TI0

Top Cover

Warning

Before performing the following removal and replacement procedures, ensure that the DC On/Off button on the OCP is in the OFF position and that the power cord is disconnected from the receptacle on the cabinet power distribution unit or the ac input receptacle on the rear of the chassis.

Removal

Perform the following procedure to remove the top cover:

1. Extend the chassis for service (see Extending the Chassis for Service section).
2. Remove the operator control panel cover (see Operator Control Panel Cover section).
3. Remove the front cover (see Front Cover section).
4. Remove the two screws that secure the top cover (see Figure 6–7).
5. Lift the front edge of the top cover and pull forward until the rear edge slides out from under the retaining lip (see Figure 6–7).
6. Lift the top cover off of the chassis (see Figure 6–7).

Replacement

To replace the top cover, refer to Figure 6–7 and reverse steps 1 through 6 of the removal procedure.

Figure 6–7 Removing and Replacing the Top Cover

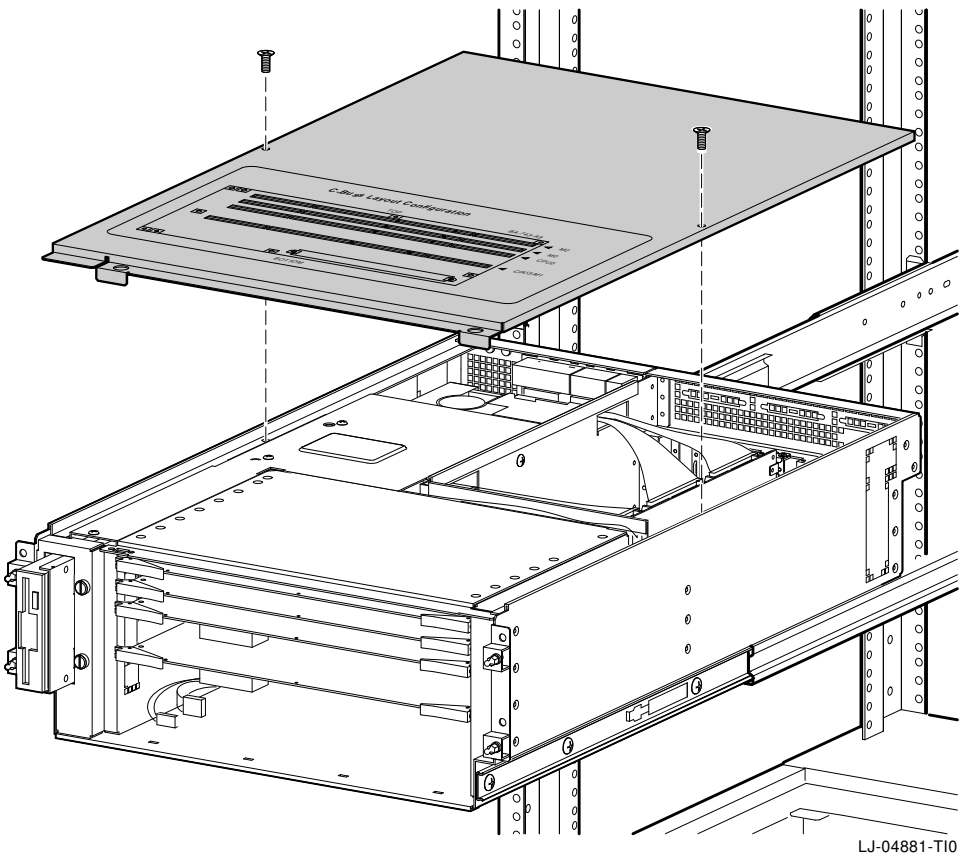

Safety Cover

Warning

Before performing the following removal and replacement procedures, ensure that the DC On/Off button on the OCP is in the OFF position and that the power cord is disconnected from the receptacle on the cabinet power distribution unit or the ac input receptacle on the rear of the chassis.

Removal

Perform the following procedure to remove the safety cover:

1. Extend the chassis for service (see Extending the Chassis for Service section).
2. Remove the operator control panel cover (see Operator Control Panel Cover section).
3. Remove the front cover (see Front Cover section).
4. Remove the top cover (see Top Cover section).
5. Remove the five screws that secure the safety cover (see Figure 6–8).
6. Lift the safety cover off of the chassis (see Figure 6–8).

Replacement

To replace the safety cover, refer to Figure 6–8 and reverse steps 1 through 6 of the removal procedure.

Figure 6–8 Removing and Replacing the Safety Cover

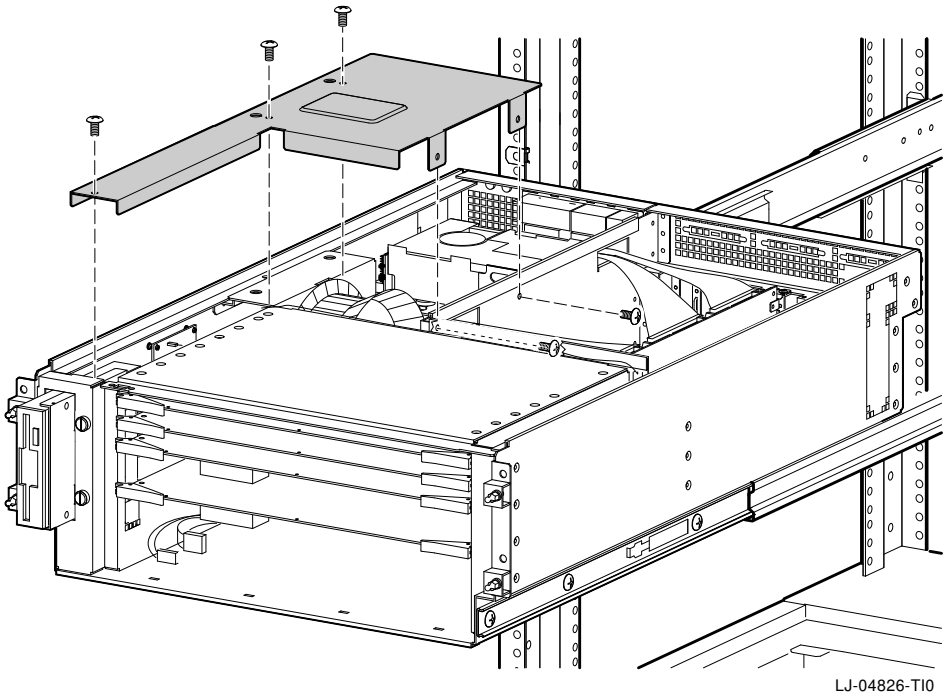

RX23L Floppy Drive

Warning

Before performing the following removal and replacement procedures, ensure that the DC On/Off button on the OCP is in the OFF position and that the power cord is disconnected from the receptacle on the cabinet power distribution unit or the ac input receptacle on the rear of the chassis.

Removal

Perform the following procedure to remove the RX23L floppy drive:

1. Extend the chassis for service (see Extending the Chassis for Service section).
2. Remove the operator control panel cover (see Operator Control Panel Cover section).
3. Remove the front cover (see Front Cover section).
4. Remove the top cover (see Top Cover section).
5. Remove the safety cover (see Safety Cover section).
6. Loosen the two captive screws ❶ that secure the drive to the chassis (see Figure 6–9).
7. Push the drive into the chassis until it clears the opening in the front of the chassis, then lift the drive up and out of the chassis.
8. Disconnect the data ❷ and power ❸ cables from the rear of the drive (see Figure 6–9).
9. Remove the four screws ❹ that secure the drive to the mounting bracket (see Figure 6–9).

Replacement

To replace the RX23L floppy drive, refer to Figure 6–9 and reverse steps 1 through 9 of the removal procedure.

Note

Verify that the new drive's ID select is set to 1 before installing the new drive.

Figure 6–9 Removing and Replacing the RX23L Floppy Drive

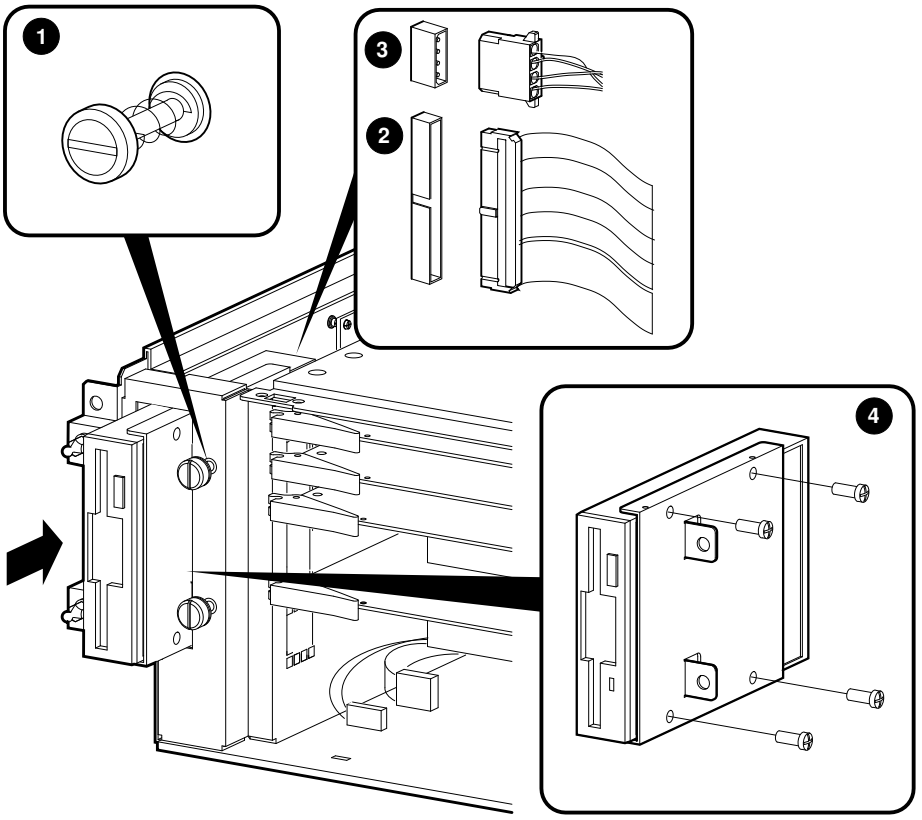

LJ-04827-TI0

Remote I/O Module

Warning

Before performing the following removal and replacement procedures, ensure that the DC On/Off button on the OCP is in the OFF position and that the power cord is disconnected from the receptacle on the cabinet power distribution unit or the ac input receptacle on the rear of the chassis.

Removal

Perform the following procedure to remove the remote I/O module:

1. Extend the chassis for service (see Extending the Chassis for Service section).
2. Disconnect any cables that are connected to the remote I/O module from the rear of the chassis.
3. Remove the operator control panel cover (see Operator Control Panel Cover section).
4. Remove the front cover (see Front Cover section).
5. Remove the top cover (see Top Cover section).
6. Disconnect the wide ribbon cable ❶ from the front edge of the remote I/O module (see Figure 6–10).
7. Disconnect the speaker cable ❷ from the remote I/O module (see Figure 6–10).
8. Put on an antistatic wriststrap.

Caution

An antistatic wriststrap *must* be worn when handling any module to prevent damage to the module.

9. Unsnap the front edge of the remote I/O module from the two standoffs ❸ that secure it to the remote I/O module bracket (see Figure 6–10).

10. Tilt the front edge of the remote I/O module up and pull it forward until the connectors on the rear of the module clear the cutouts on the rear of the chassis.

Replacement

To replace the remote I/O module, refer to Figure 6–10 and reverse steps 1 through 10 of the removal procedure.

Figure 6–10 Removing and Replacing the Remote I/O Module

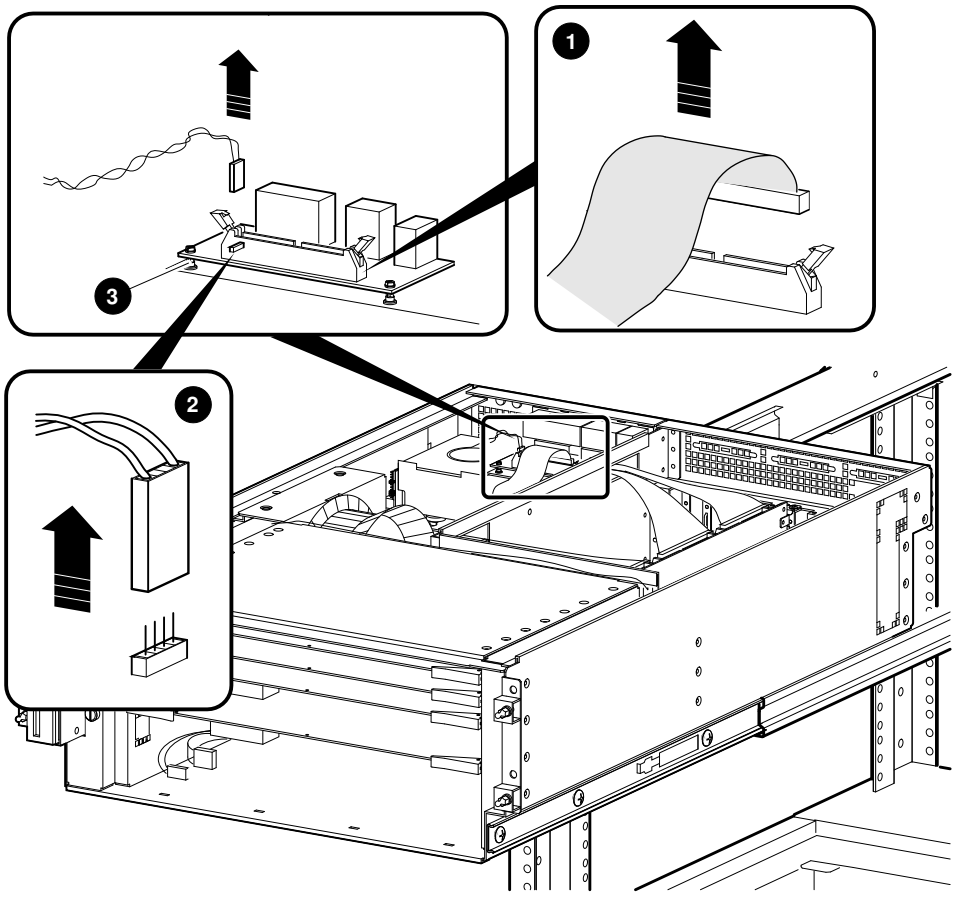

Fan Assembly

Warning

Before performing the following removal and replacement procedures, ensure that the DC On/Off button on the OCP is in the OFF position and that the power cord is disconnected from the receptacle on the cabinet power distribution unit or the ac input receptacle on the rear of the chassis.

Removal

Perform the following procedure to remove the fan assembly and fan:

1. Extend the chassis for service (see Extending the Chassis for Service section).
2. Remove the operator control panel cover (see Operator Control Panel Cover section).
3. Remove the front cover (see Front Cover section).
4. Remove the top cover (see Top Cover section).
5. Remove the safety cover (see Safety Cover section).
6. Disconnect the fan power connector ❶ (4-pin connector) between the fan and the fan speed-control module (see Figure 6–11).
7. Remove the three screws ❷ that secure the fan assembly to the left side of the chassis (see Figure 6–11).
8. Remove the two screws ❸ that secure the fan assembly to the top left edge of the chassis (see Figure 6–11).
9. Lift the fan assembly out of the chassis.
10. Remove the two screws ❹ that secure the fan to the fan assembly. Note the orientation of the airflow and rotation indicators for installing the new fan.

Replacement

To replace the fan and fan assembly, refer to Figure 6–11 and reverse steps 1 through 10 of the removal procedure.

Figure 6–11 Removing and Replacing the Fan Assembly

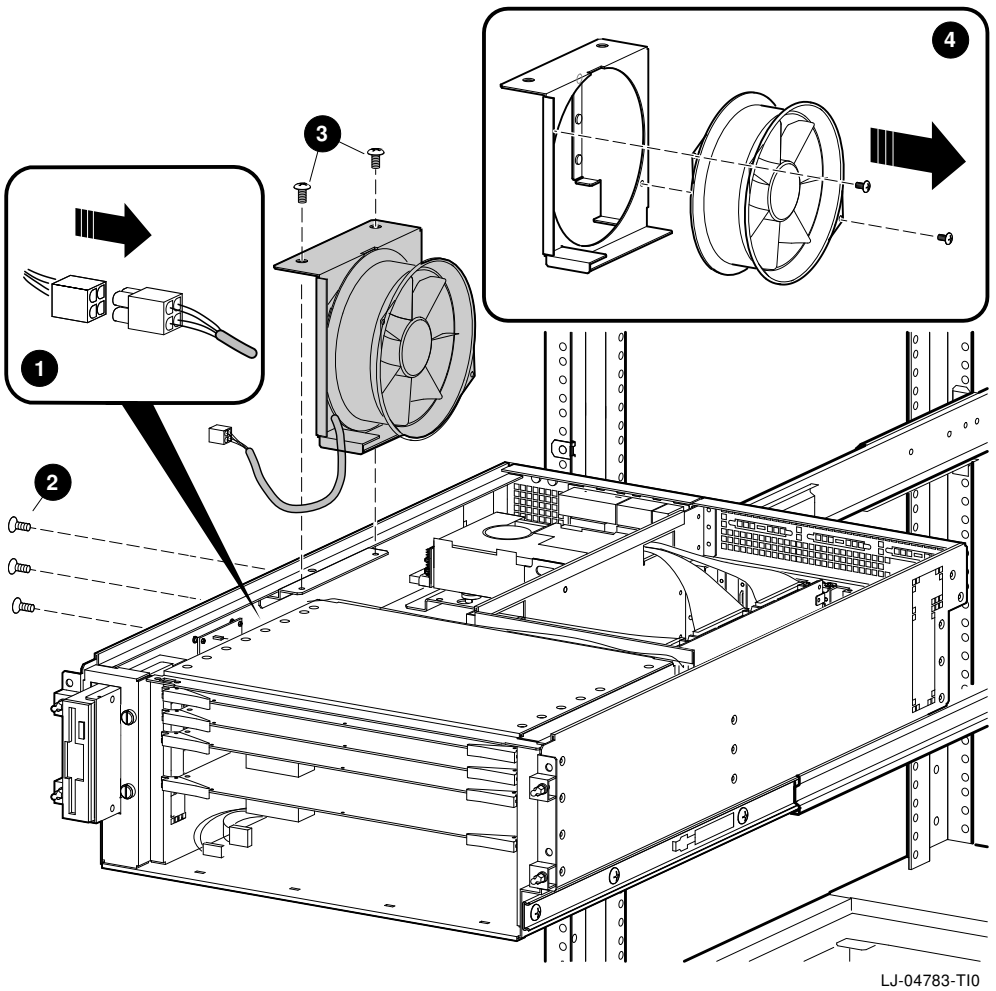

Fan Speed-Control Module

Warning

Before performing the following removal and replacement procedures, ensure that the DC On/Off button on the OCP is in the OFF position and that the power cord is disconnected from the receptacle on the cabinet power distribution unit or the ac input receptacle on the rear of the chassis.

Removal

Perform the following procedure to remove the fan speed-control module:

1. Extend the chassis for service (see Extending the Chassis for Service section).
2. Remove the operator control panel cover (see Operator Control Panel Cover section).
3. Remove the front cover (see Front Cover section).
4. Remove the top cover (see Top Cover section).
5. Remove the safety cover (see Safety Cover section).
6. Put on an antistatic wriststrap.

Caution

An antistatic wriststrap *must* be worn when handling any module to prevent damage to the module.

7. Unsnap the fan speed-control module from the four standoffs and lift the module out of the chassis (see Figure 6–12).
8. Disconnect the fan and module power connector ❶ (4-pin connector) and the thermal sensor connector ❷ (2-pin connector) from the fan speed-control module (see Figure 6–12).

Replacement

To replace the fan speed-control module, refer to Figure 6–12 and reverse steps 1 through 8 of the removal procedure.

Figure 6–12 Removing and Replacing the Fan Speed-Control Module

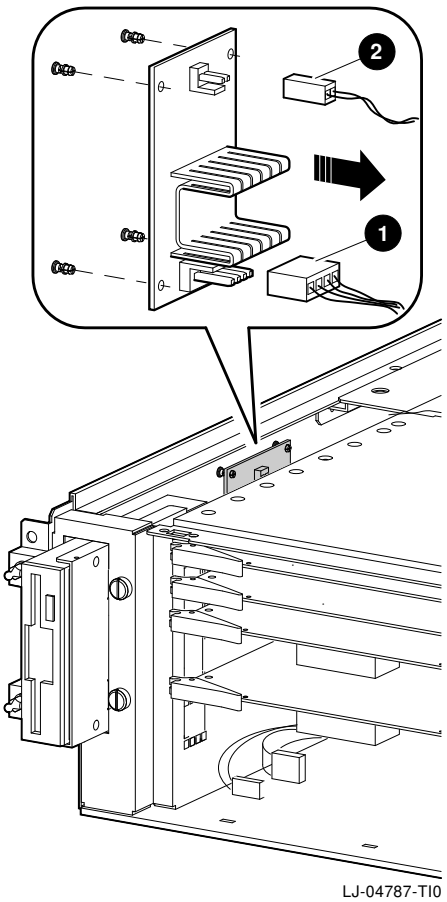

Thermal Sensor

Warning

Before performing the following removal and replacement procedures, ensure that the DC On/Off button on the OCP is in the OFF position and that the power cord is disconnected from the receptacle on the cabinet power distribution unit or the ac input receptacle on the rear of the chassis.

Removal

Perform the following procedure to remove the thermal sensor:

1. Extend the chassis for service (see Extending the Chassis for Service section).
2. Remove the operator control panel cover (see Operator Control Panel Cover section).
3. Remove the front cover (see Front Cover section).
4. Remove the top cover (see Top Cover section).
5. Remove the safety cover (see Safety Cover section).
6. Disconnect the thermal sensor connector ❶ (2-pin connector) from the fan speed-control module (see Figure 6–13).
7. Unclip the thermal sensor from the holder ❷ on the right side of the CPU and memory card cage (see Figure 6–13).

Replacement

To replace the thermal sensor, refer to Figure 6–13 and reverse steps 1 through 7 of the removal procedure.

Figure 6–13 Removing and Replacing the Thermal Sensor

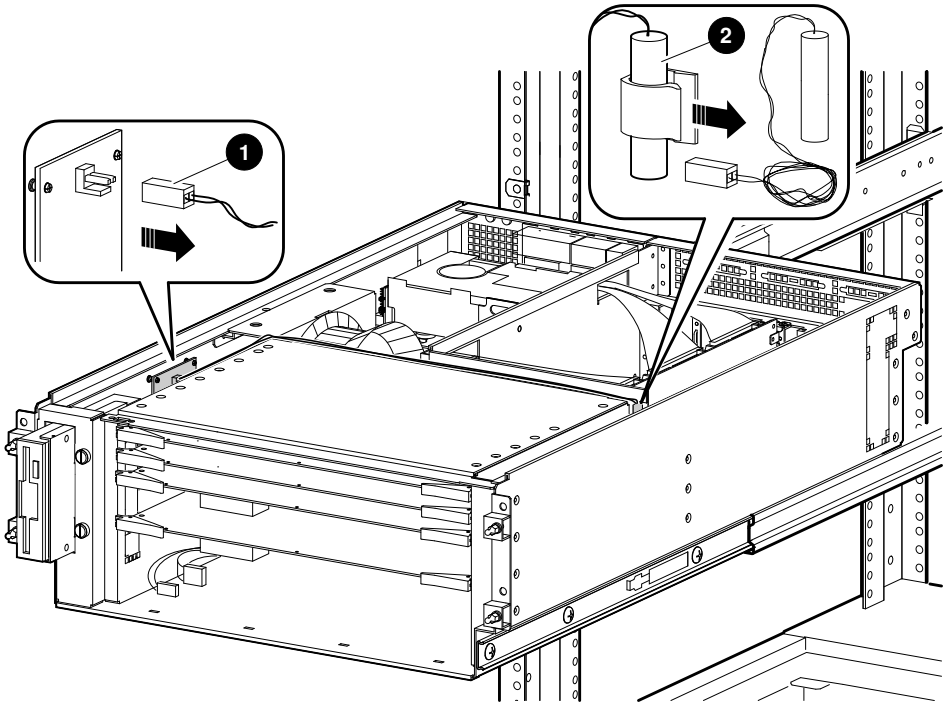

RZ28 Hard Disk Drive

Warning

Before performing the following removal and replacement procedures, ensure that the DC On/Off button on the OCP is in the OFF position and that the power cord is disconnected from the receptacle on the cabinet power distribution unit or the ac input receptacle on the rear of the chassis.

Removal

Perform the following procedure to remove the RZ28 hard disk drive:

1. Extend the chassis for service (see Extending the Chassis for Service section).
2. Remove the operator control panel cover (see Operator Control Panel Cover section).
3. Remove the front cover (see Front Cover section).
4. Remove the top cover (see Top Cover section).
5. Remove the safety cover (see Safety Cover section).
6. Push down on the locking tab ❶ and slide the RZ28 hard disk drive and top drive mounting bracket ❷ toward the front (when facing the system) until the drive and top bracket are centered over the large part of the keyhole openings on the bottom mounting bracket ❸ (see Figure 6–14).
7. Lift the RZ28 hard disk drive and top drive mounting bracket enough to disconnect the data cable ❹ and the power cable ❺ from the left side of the RZ28 hard disk drive (see Figure 6–14).
8. Lift the RZ28 hard disk drive and top drive mounting bracket up and out of the chassis.

9. Remove the four 6-32 screws ❻ that secure the top drive mounting bracket to the RZ28 hard disk drive (see Figure 6–14).

Replacement

To replace the RZ28 hard disk drive, refer to Figure 6–14 and reverse steps 1 through 9 of the removal procedure.

Figure 6–14 Removing and Replacing the RZ28 Hard Disk Drive

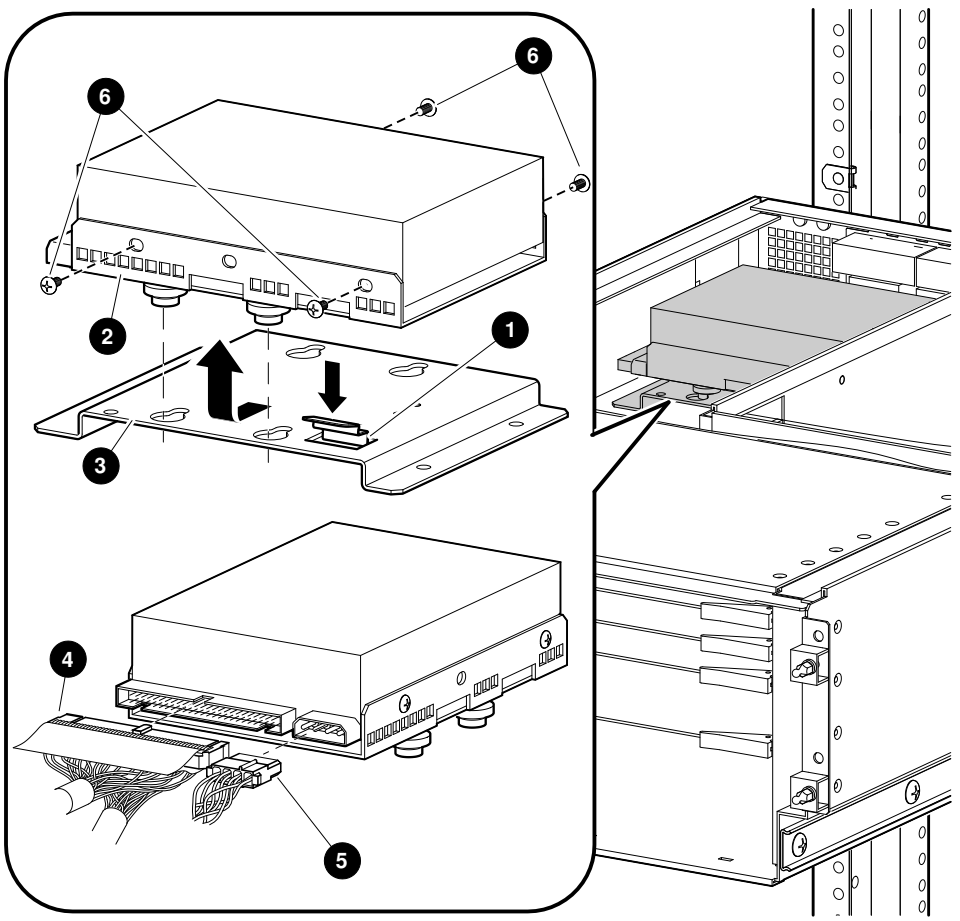

LJ-04780-TI0

Power Supply

Warning

Before performing the following removal and replacement procedures, ensure that the DC On/Off button on the OCP is in the OFF position and that the power cord is disconnected from the receptacle on the cabinet power distribution unit or the ac input receptacle on the rear of the chassis.

Removal

Perform the following procedure to remove the power supply:

1. Extend the chassis for service (see Extending the Chassis for Service section).
2. Remove the operator control panel cover (see Operator Control Panel Cover section).
3. Remove the front cover (see Front Cover section).
4. Remove the top cover (see Top Cover section).
5. Remove the safety cover (see Safety Cover section).
6. Remove the fan assembly (see Fan Assembly section).
7. Remove the RZ28 hard disk drive (see RZ28 Hard Disk Drive section).
8. Remove the remote I/O module (see Remote I/O Module section).
9. Remove the two screws ❶ on the rear of the chassis that secure the remote I/O module bracket ❷ to the chassis, and lift the bracket out of the chassis (see Figure 6–15).
10. Disconnect the two connectors ❸ from the front of the power supply (see Figure 6–15).
11. Remove the four screws ❹ that secure the four power cables ❺ to the lugs ❻ on the front of the power supply (see Figure 6–15). Ensure that these power cables are properly labeled for reconnection.

12. Remove the two nuts ❼ that secure the power supply to the bottom of the chassis (see Figure 6–15).
13. Remove the three screws ❽ that secure the power supply to the rear of the chassis (see Figure 6–15).
14. Lift the power supply up and forward out of the chassis.
15. Remove the four nuts ❾ that secure the RZ28 hard disk drive bottom mounting bracket ❿ to the studs on top of the power supply (see Figure 6–15).
16. Remove the two screws ⓫ that secure the mounting bracket to the front of the power supply (see Figure 6–15).

Replacement

To replace the power supply, refer to Figure 6–15 and reverse steps 1 through 16 of the removal procedure.

Power Supply

Figure 6–15 Removing and Replacing the Power Supply

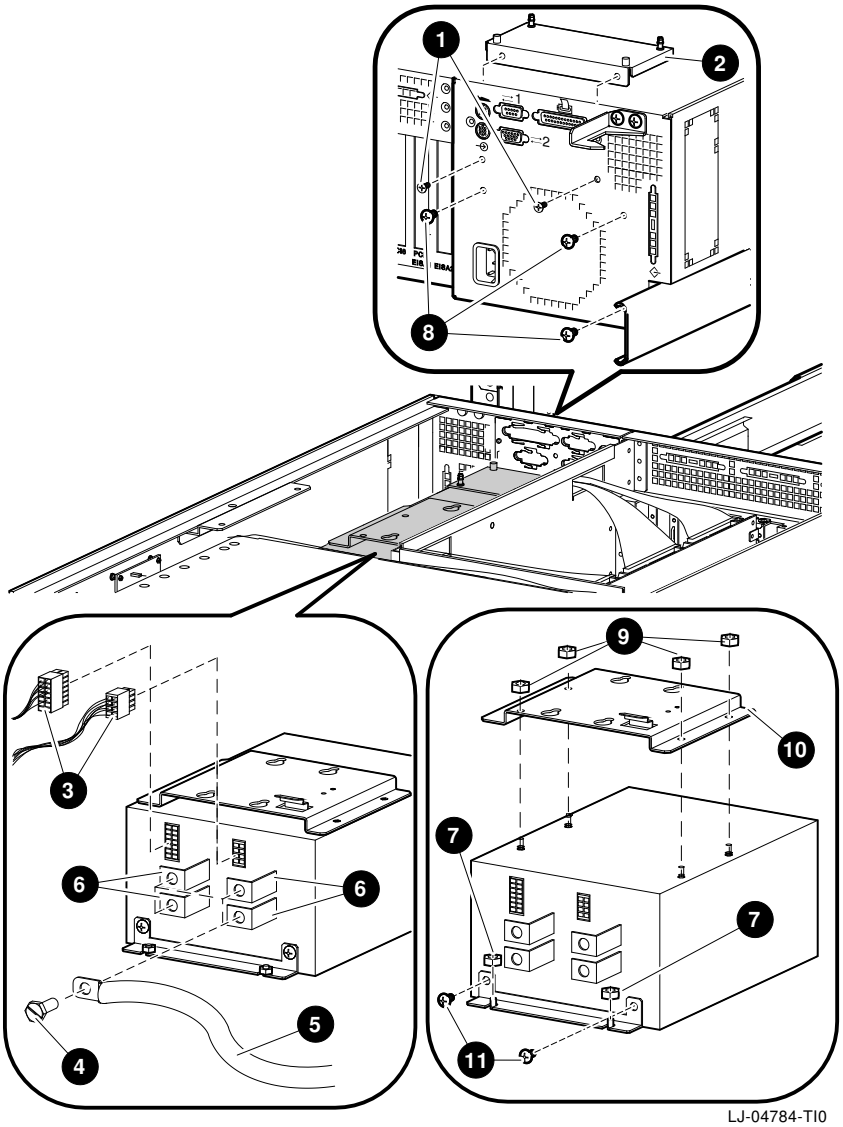

System Backplane

Warning

Before performing the following removal and replacement procedures, ensure that the DC On/Off button on the OCP is in the OFF position and that the power cord is disconnected from the receptacle on the cabinet power distribution unit or the ac input receptacle on the rear of the chassis.

Removal

Perform the following procedure to remove the system backplane:

1. Extend the chassis for service (see Extending the Chassis for Service section).
2. Remove the operator control panel cover (see Operator Control Panel Cover section).
3. Remove the front cover (see Front Cover section).
4. Remove the CPU and memory modules (see CPU and Memory Modules section).
5. Remove the seven screws that secure the system backplane to the chassis (see Figure 6–16).
6. Grasp the plastic handle ❶ on the system backplane and pull straight out to disconnect the system backplane from the I/O backplane (see Figure 6–16).

Replacement

To replace the system backplane, refer to Figure 6–16 and reverse steps 1 through 6 of the removal procedure.

Figure 6–16 Removing and Replacing the System Backplane

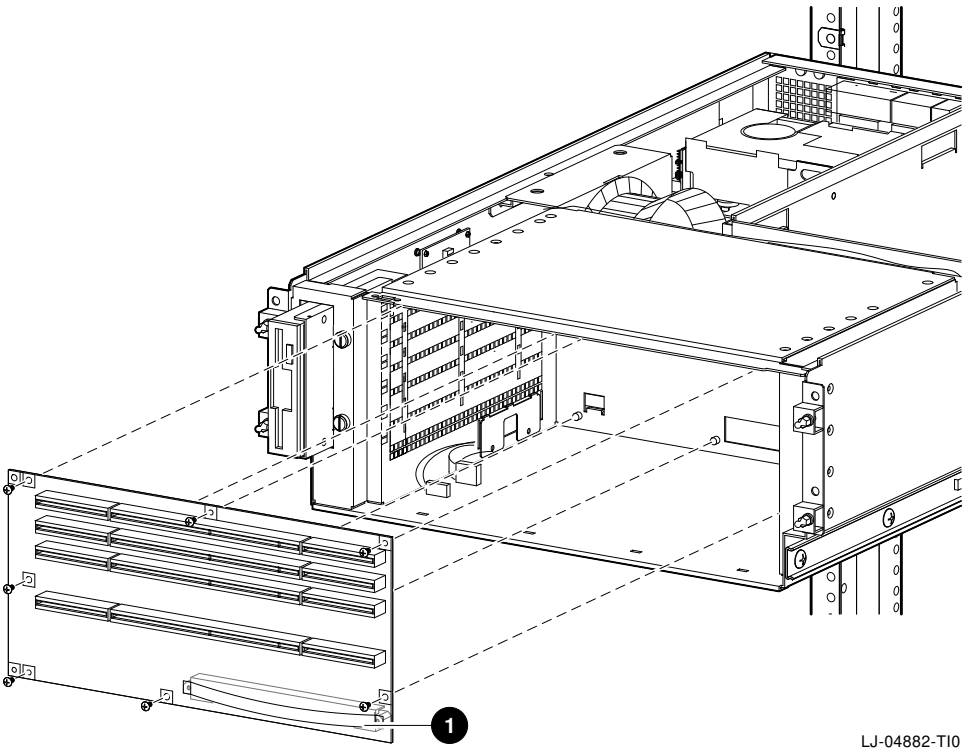

I/O Backplane

Warning

Before performing the following removal and replacement procedures, ensure that the DC On/Off button on the OCP is in the OFF position and that the power cord is disconnected from the receptacle on the cabinet power distribution unit or the ac input receptacle on the rear of the chassis.

Removal

Perform the following procedure to remove the I/O backplane:

1. From the rear of the cabinet, disconnect all of the cables that are connected to the PCI/EISA option cards and the standard I/O card. Ensure that the cables are properly labeled for reconnection.
2. Extend the chassis for service (see Extending the Chassis for Service section).
3. Remove the operator control panel cover (see Operator Control Panel Cover section).
4. Remove the front cover (see Front Cover section).
5. Remove the top cover (see Top Cover section).
6. Remove the CPU and memory modules (see CPU and Memory Modules section).
7. Remove the system backplane (see System Backplane section).
8. Disconnect the internal cables from all of the PCI/EISA option cards and the standard I/O card. Ensure that the cables are properly labled for reconnection.
9. Remove the standard I/O card ❶ and all of the PCI /EISA option cards that are installed in the chassis (see Figure 6–17). Ensure that these cards are properly labled for replacement into the same slot from which they were removed.

10. Disconnect the 2 I/O backplane cables ❷ from the cable bracket ❸ on the right side of the chassis (see Figure 6–17).
11. Lift the plastic shield ❹ and remove the 13 screws ❺ that secure the 3 power bus bars ❻ to the left side of the I/O backplane (see Figure 6–17).
12. Remove the 6 screws ❼ that secure the I/O backplane ❽ to the chassis (see Figure 6–17).
13. Slide the I/O backplane to the rear of the chassis.
14. Lift the I/O backplane up and out of the chassis.

Replacement

To replace the I/O backplane, refer to Figure 6–17 and reverse steps 1 through 14 of the removal procedure.

Figure 6–17 Removing and Replacing the I/O Backplane

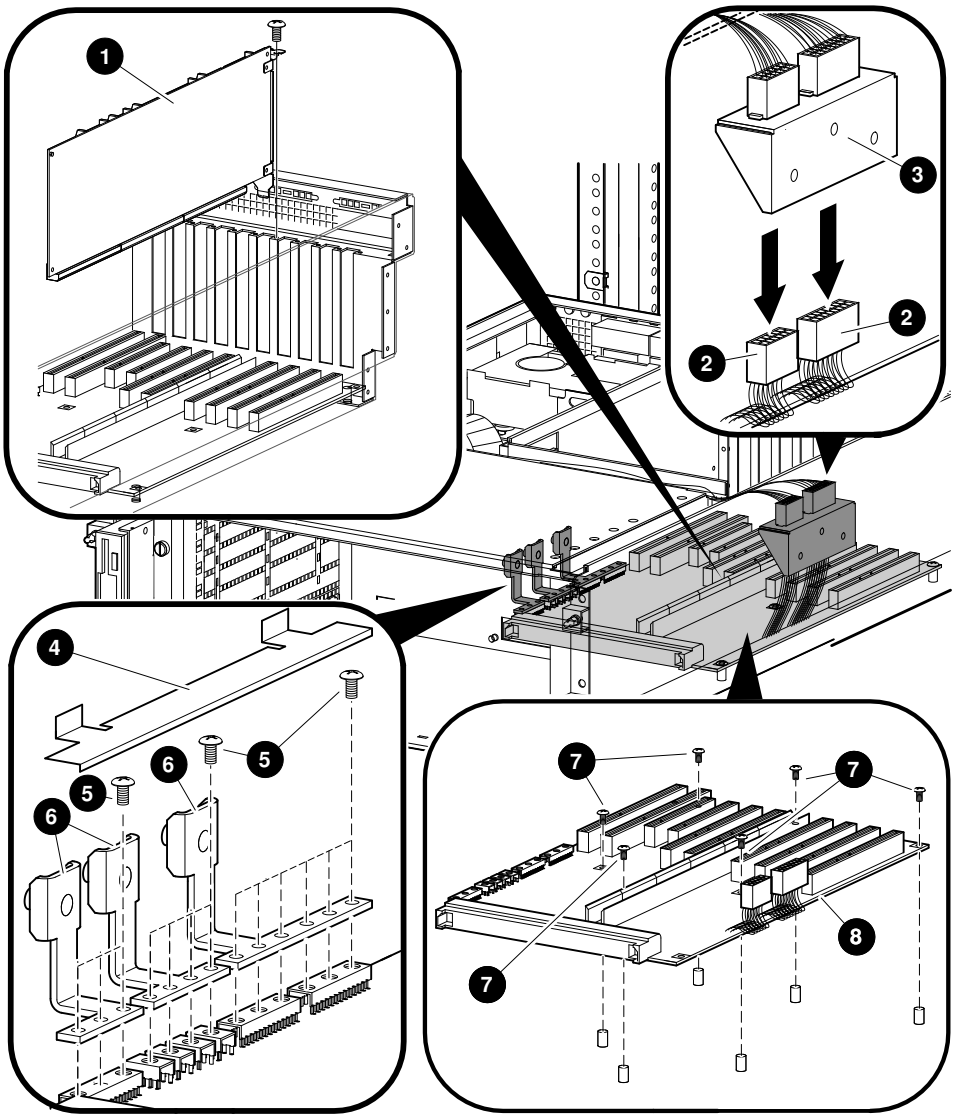

A

Hardware Specifications

In This Appendix

This appendix lists the hardware specifications for the AlphaServer 2100A low-profile system.

This appendix covers the following topics:

- System Dimensions
- Electrical Specifications
- Environmental Conditions

System Specifications

System Dimensions

Table A–1 provides information about the AlphaServer 2100A low-profile system dimensions.

Table A–1 System Dimensions

Weight	Height	Width	Depth
34.02 kg (75.0 lb)	17.78 cm (7.0 in.)	48.26 cm (19.0 in.)	67.31 cm (26.5 in.)

Electrical Specifications

Table A–2 provides information about the various electrical specifications for the AlphaServer 2100A low-profile system.

Table A–2 System Electrical Specifications

Nominal voltage	100-120 Vac/220-240 Vac with automatic voltage sensing
Operational voltage range	90-132 Vac/180-256 Vac
Input current (maximum)	8.2 A at 100-120 Vac 4.1 A at 220-240 Vac
Phasing	Single-phase
Nominal frequency	50/60 Hz
Frequency range	47-53 Hz/57-63 Hz
Input power	810 W input maximum, power factor .98 minimum
Output power	570 W output maximum, power factor .98 minimum
U.S.A. power cord plug	NEMA 5-15P (Mates with receptacle NEMA 5-15R) for 120 V applications or NEMA 6-15P (Mates with receptacle NEMA 6-15R) for 240 V applications.

Environmental Conditions

Table A–3 provides information about the environmental conditions in which the AlphaServer 2100A low-profile system can operate.

Table A–3 System Environmental Conditions

Operating Conditions	
Temperature range	10°C to 35°C (50°F to 95°F)
Temperature change rate	11°C/hr (20°F/hr) maximum
Wet bulb temperature (maximum)	28°C (82°F)
Dew point temperature (minumum)	2°C (36°F)
Relative humidity	10% to 90% (noncondensing)
Air intake location	Front and side
Air exhaust location	Rear
Airflow	100 CFM
Heat dissipation	1535-2763 BTU/hr (450-810 W)
Maximum altitude	3,048 m (10,000 ft)
Mechanical shock	10 ms duration 20 g level
Vibration (.25 g all axis)	5-15.65 Hz at 0.020-inch DA 15.65-200 Hz at 0.25 g Pk 200-500 Hz at 0.10 g Pk 500-200 Hz at 0.10 g Pk 200-15.65 Hz at 0.25 g Pk 15.65-5 Hz at 0.020-inch DA Sweep rate of 1 octave/min

(continued on next page)

Table A–3 (Cont.) System Environmental Conditions

Nonoperating Conditions	
Temperature range	-40°C to 66°C (-40°F to 151°F)
Wet bulb temperature (maximum)	46°C (115°F)
Relative humidity	10% to 95% (noncondensing)
Maximum altitude	12,192 m (40,000 ft)
Vibration (packaged system)	5-300 Hz at 1.034 g rms

DA = Double Amplitude

g = Gravities

Pk = Peak

B
Field Replaceable Units

In This Appendix

This appendix lists the major field replaceable units (FRUs) and part numbers for the AlphaServer 2100A low-profile system chassis (see Table B–1).

Table B–1 AlphaServer 2100A Low-Profile System Chassis FRUs

Part Description	Part Number
CPU Module (250 MHz)	B2040-AB
CPU Module (291 MHz)	B2040-BA
Memory Module (128-MB)	B2021-FA (MS451-DA)
Memory Module (512-MB)	B2022-FA (MS451-FA)
Floppy Drive (1.44 MB)	RX23L-AA
Hard Disk Drive (2 MB, 7200 RPM)	RZ28D-E
Front Bezel	70-32510-01
Operator Control Panel Board	54-24393-01
Standard I/O Module	54-24389-01
Remote I/O Module	54-23151-01
Fan	12-45231-01
Fan Speed-Control Module	30-46859-01
Power Supply	30-45270-01
I/O Backplane	54-24403-01

(continued on next page)

Table B–1 (Cont.) AlphaServer 2100A Low-Profile System Chassis FRUs

Part Description	Part Number
System Backplane	54-24385-01
Speaker	70-32685-01
DC Power and Signal Harness Assembly	17-04333-01
28-AWG, 10-conductor, SCSI Cable Assembly	17-04271-01
34-conductor, Flat-Ribbon Cable Assembly	17-04273-01
60-conductor, Flat-Ribbon Cable Assembly	17-04274-01
28-AWG, 50-conductor, SCSI Cable Assembly	17-04275-01
18/22/24-AWG, 16-conductor, Harness Assembly	17-04276-01
4-AWG Power Cable with Terminal Lugs	17-04296-01
4-AWG Power Cable with Terminal Lugs	17-04296-02
4-AWG Power Cable with Terminal Lugs	17-04296-03
4-AWG Power Cable with Terminal Lugs	17-04296-04
18-AWG, Discrete-Wire Harness Assembly	17-04299-01

Index

5.25-inch tape drive
  installation, 4–30

A

AC power connector
  location of, 1–13
Accessory kit
  contents of, 2–9
Adapter
  Fast SCSI-2, 4–29
Alignment
  slides to cabinet, 2–21
ARC interface
  switching to SRM from, 3–10
Attaching slides
  rails, 2–17
Autoboot
  Digital UNIX, 3–15
  OpenVMS, 3–15

B

Boot diagnostic flow, 5–25
Boot menu (ARC), 3–9
Boot problems
  troubleshooting, 5–25
Boot procedure, 3–14
  booting Digital UNIX automatically, 3–15
  booting OpenVMS automatically, 3–15
Bus
  expansion of, 2–42
  system, 4–12
Buses, displaying
  for Digital UNIX, 4–6
  for OpenVMS, 4–6
Buses, displaying (SRM), 4–8

C

Cabinet
  stability of, 2–14
Cable management system
  cable routing guidelines, 2–31
  installation of, 2–29
Cabling DSSI adapters, 4–34
CFG files, 5–23
Checking content of shipment, 2–8
COM2 and parallel port
  loopback tests, 5–16
Commands
  to examine system configuration, 4–5
Configuration
  See ECU
  EISA boards, 4–23
  EISA/ISA boards, 4–25
  of environment variables, 4–11
Configuration file (CFG), EISA and ISA, 4–19
Configuration, examining
  for Digital UNIX, 4–5
  for OpenVMS, 4–5
  for Windows NT, 4–5
Considerations
  before troubleshooting, 5–2
Console
  diagnostic flow, 5–11

Console commands
set bootdef_dev, 4–11
set boot_osflags, 4–11
set envar, 4–11
show auto_action, 4–11
show config, 4–6
show device, 4–8
show envar, 4–11
show fru, 5–15
show memory, 4–10
test, 5–16
Console device, connecting, 2–34
Console mode
defined, 3–19
invoking, 3–19
invoking remotely, 3–19
invoking with Halt button, 3–19
problems, troubleshooting, 5–11, 5–13
prompt, 3–19
troubleshooting, 5–13
Console output, 4–36
Console port configuration, 4–36
Console prompt, 3–19
SRM console, 3–8
Console terminal, 3–19
Console, invoking
See Console mode, 3–19
Consoles
switching between ARC and SRM, 3–9
Controllers, displaying (SRM), 4–8
Controls, accessing, 1–5
CPU, 4–13
CPU and memory modules
removal and replacement, 6–12
CPU module
installation requirements, 4–13
location of, 4–12
SMP configuration and, 4–13
Customer support, 5–6, 5–7

D

DC On/Off button, 1–8
DC On/Off light, 1–8
Device naming convention, 4–8
Devices, displaying
for Digital UNIX, 4–6
for OpenVMS, 4–6
Devices, displaying (SRM), 4–8
Diagnostic flow
boot problems, 5–25
console, 5–11
console mode problems, 5–13
errors reported by operating system, 5–26
power problems, 5–10
problems getting to console mode, 5–11
problems reported by console, 5–13
Door, OCP
opening of, 1–10
unlocking of, 1–10

E

ECU
actions after exiting, 4–22
defined, 4–19
invoking console firmware, 4–20
procedure for running, 4–20
procedures, 4–23
starting up, 4–20
edit command, 5–28
EISA, 1–3
EISA boards
configuring, 4–23
EISA boards, identifying, 4–18
EISA bus
features of, 4–16
location of, 4–12
problems at power-up, 5–21
troubleshooting, 5–21
troubleshooting tips, 5–23

EISA configuration procedure, 4–23
EISA Configuration Utility
  See ECU
EISA I/O boards
  location of, 1–11
EISA/ISA boards
  configuring, 4–25
EISA/ISA configuration procedure, 4–25
Enclosure, 1–3
Environment variables
  configuring, 4–11
  resetting, 3–10
  setting and examining, 4–11
Errors
  commands to report, 5–15
Ethernet
  external loopback, 5–16
Extended I/O module
  location of, 4–12
Extending chassis
  service, 6–4

F

Fail-safe loader, 5–27
  activating, 5–27
  power-up, 5–27
Fan
  location of, 1–11
Fan assembly
  removal and replacement, 6–22
Fan speed-control module
  location of, 1–11
  removal and replacement, 6–24
Fast SCSI-2 adapter, 4–29
Field replaceable units, B–1
Fixed-media
  storage problems, 5–18
Front bezel
  removal and replacement, 6–2
Front cover
  removal and replacement, 6–10
FRUs
  commands to report errors, 5–15

G

Guidelines
  cable routing, 2–31

H

Halt button
  invoking console mode with, 1–8
  invoking operating system mode with, 1–8
Hangs
  using Reset button to recover from, 1–9
Hardware specifications, A–1

I

I/O backplane
  removal and replacement, 6–35
I/O boards
  EISA, location of, 1–11
  PCI, location of, 1–11
I/O bus, EISA features, 4–16
I/O module, 4–15
init -driver command, 5–28
Installation
  5.25-inch tape drive, 4–30
  attaching the slides, 2–14, 2–17
  cable management system, 2–29
  checking content of shipment, 2–8
  interlock actuator bracket, 2–24
  interlock actuator latches, 2–26
  keyboard/mouse/video extension cables, 2–38
  power cord, 2–22
  RRD45 CD-ROM drive, 4–30
  system slides, 2–11
  tools required, 2–7
Installation area, 2–15
Interlock actuator bracket, installation of, 2–24
Interlock actuator latches, installation of, 2–26

Interlock system, 2–24
Internal SCSI bus, 4–29
Interrupt lines
and EISA, 5–23
IRQs
and EISA, 5–23
ISA boards, identifying, 4–18
ISA bus
defined, 4–17
ISA/EISA boards
configuring, 4–25
ISA/EISA configuration procedure, 4–25

K

Keyboard/mouse/video extension cables,
installation of, 2–38

L

Loopback tests
COM2 and parallel ports, 5–16

M

Mass storage
described, 4–29
problems, troubleshooting, 5–18, 5–20
Memory module
displaying information for, 4–10
location of, 4–12
variations of, 4–14
Memory, displaying (SRM), 4–10
Modem, connecting, 2–34
Modules
CPU, 4–13

N

Networks
connecting to, 2–33
Ethernet, 2–33
nvram file, 5–28

O

OCP
See Operator control panel
Operating system
boot failures, reporting, 5–26
preboot tasks, 3–10
Operating system problems
troubleshooting, 5–26
Operating system, booting, 3–14
Operating systems
switching, 3–13
Operator control panel
controls
location of, 1–6
DC On/Off button, 1–7
DC On/Off light, 1–7
display, interpreting, 5–12
Halt button, 1–8
Halt light, 1–8
location of, 1–6
power-up/diagnostic display, 1–7
Reset button, 1–9
Operator control panel board
removal and replacement, 6–8
Operator control panel cover
removal and replacement, 6–6

P

PCI, 1–3
PCI bus
defined, 4–27
location of, 4–12
troubleshooting, 5–24
PCI I/O boards
location of, 1–11
Peripheral devices, connecting, 2–34
Phone numbers
customer support, 5–7
Power cord
installation of, 2–22

Power cords
types of, 2–6
Power problems
troubleshooting, 5–10
Power requirements, 2–4
Power supply
location of, 1–11
removal and replacement, 6–30
Power-down procedure
turning off dc power, 3–16
Power-up display
interpreting, 5–12
Power-up sequence
mass-storage failures, 5–18
PCI failures, 5–24
Power-up/diagnostic display, 3–6
Printer, connecting, 2–34
Problem reporting, 5–6
Problems
See Troubleshooting
determining type, 5–5
identifying, 5–1, 5–4

R

Rail-hole pattern, 2–15
Rails
attaching slides to, 2–17
Reboot procedure, 3–14
Remote I/O module
location of, 1–11
removal and replacement, 6–20
Removable-media
storage problems, 5–20
Removable-media devices
SCSI support for, 4–29
Removal and replacement
CPU and memory modules, 6–12
fan assembly, 6–22
fan speed-control module, 6–24
front bezel, 6–2
front cover, 6–10
I/O backplane, 6–35
operator control panel board, 6–8
operator control panel cover, 6–6
Removal and replacement (cont'd)
power supply, 6–30
remote I/O module, 6–20
RX23L floppy drive, 6–18
RZ28 hard disk drive, 6–28
safety cover, 6–16
system backplane, 6–33
thermal sensor, 6–26
top cover, 6–14
Reset button
for recovering from hangs, 1–9
RRD45 CD-ROM drive
installation, 4–30
RX23L floppy drive
removal and replacement, 6–18
RZ28 hard disk drive
removal and replacement, 6–28

S

Safety cover
removal and replacement, 6–16
SCSI bus
expansion of, 2–42
internal, 4–29
Serial ports, 4–36
Service
extending chassis, 6–4
set command (SRM), 4–11
Shipment
checking content of, 2–8
show command (SRM), 4–11
show configuration command, 4–6
show device command (SRM), 4–8
show fru command (SRM), 5–15
show memory command (SRM), 4–10
Site preparation
verifying of, 2–2
Slides
alignment of, 2–21
preparation of, 2–11
SMP configuration
CPU modules, 4–13

Specifications
dimensions, A–2
electrical, A–2
environmental, A–3
Stability
cabinet, 2–14
Standard I/O module, 4–15
Startup procedure
preboot tasks, 3–10
Sysem Configuration Diskette, 4–19
System
before installing the, 2–1
configuration, examining, 4–5
expansion of SCSI, 2–42
slide mounting of, 2–19
turning off, 3–16
turning on, 3–2
System backplane
removal and replacement, 6–33
System bus, location of, 4–12
System components
front, 1–6
System configuration, examining
for Digital UNIX, 4–5
for OpenVMS, 4–5
for Windows NT, 4–5
System keys, locating, 1–5
System operation
boot, 3–14
reboot, 3–14
System slides
installation of, 2–11
System software
booting, 3–14
System startup screen, 3–6
SYSTEMCFG volume label, 4–19

T

Terminals, connecting, 2–36
test command, 5–16
Thermal sensor
removal and replacement, 6–26
Tools required, 2–7
Top cover
removal and replacement, 6–14
Troubleshooting, 5–1
boot problems, 5–25
considerations before beginning, 5–2
console, 5–11
console mode problems, 5–13
EISA problems, 5–21
errors reported by operating system, 5–26
for self-maintenance customers, 5–2
interpreting the operator control panel power-up display, 5–12
mass-storage problems, 5–18
operating system problems, 5–26
PCI problems, 5–24
power problems, 5–10
problem reference, 5–5
problem worksheet, 5–9
problems getting to console mode, 5–11
problems reported by the console, 5–13
reporting problems, 5–6
task overview, 5–4
test command, 5–2

V

VGA monitor, connecting, 2–36
VT terminal, connecting, 2–36

Reader's Comments

AlphaServer 2100A LP System
Installation/Owner's/Service Guide

EK-21ALP-IN. A01

Your comments and suggestions help us improve the quality of our publications.

Thank you for your assistance.

I rate this manual's:	Excellent	Good	Fair	Poor
Accuracy (product works as manual says)	☐	☐	☐	☐
Completeness (enough information)	☐	☐	☐	☐
Clarity (easy to understand)	☐	☐	☐	☐
Organization (structure of subject matter)	☐	☐	☐	☐
Figures (useful)	☐	☐	☐	☐
Examples (useful)	☐	☐	☐	☐
Index (ability to find topic)	☐	☐	☐	☐
Page layout (easy to find information)	☐	☐	☐	☐

I would like to see more/less _____

_____

What I like best about this manual is _____

_____

What I like least about this manual is _____

_____

I found the following errors in this manual:

Page	Description
_____	_____
_____	_____
_____	_____

Additional comments or suggestions to improve this manual:

_____

_____

_____

For software manuals, please indicate which version of the software you are using: _____

_____

Name/Title _____ Dept. _____

Company _____ Date _____

Mailing Address _____

_____ Phone _____

Do Not Tear – Fold Here and Tape

digital™

No Postage
Necessary
If Mailed
in the
United States

BUSINESS REPLY MAIL

FIRST CLASS PERMIT NO. 33 MAYNARD MASS.

POSTAGE WILL BE PAID BY ADDRESSEE

DIGITAL EQUIPMENT CORPORATION
Shared Engineering Services
DIGITAL DRIVE MKO1–2/E12
PO BOX 9501
MERRIMACK, NH 03054–9982

Do Not Tear – Fold Here