AlphaServer 2000

Owner's Guide

Order Number: EK–400MP–OP. A01

Digital Equipment Corporation
Maynard, Massachusetts

Preliminary Version, September 1994
First printing, October 1994

Digital Equipment Corporation makes no representations that the use of its products in the manner described in this publication will not infringe on existing or future patent rights, nor do the descriptions contained in this publication imply the granting of licenses to make, use, or sell equipment or software in accordance with the description.

Possession, use, or copying of the software described in this publication is authorized only pursuant to a valid written license from Digital or an authorized sublicensor.

© Digital Equipment Corporation 1994. All Rights Reserved.

The postpaid Reader's Comments forms at the end of this document request your critical evaluation to assist in preparing future documentation.

The following are trademarks of Digital Equipment Corporation: AlphaGeneration, AlphaServer, AXP, DEC, DECchip, DECconnect, Digital, OpenVMS, StorageWorks, VAX, VT, the AlphaGeneration logo, and the DIGITAL logo.

OSF/1 is a registered trademark of Open Software Foundation, Inc. PostScript is a registered trademark of Adobe Systems, Inc. Microsoft Windows and Microsoft Windows NT are trademarks of Microsoft Corporation.

All other trademarks and registered trademarks are the property of their respective holders.

S2635

FCC Notice:

This equipment generates and uses radio frequency energy. It has been type tested and found to comply with the limits for a Class B computing device in accordance with the specifications in Part 15 of FCC Rules, which are designed to provide reasonable protection against such radio and television interference in a residential installation.

Any changes or modifications made to this equipment may void the user's authority to operate this equipment.

However, there is no guarantee that interference will not occur in a particular installation. If this equipment does cause interference to radio or television reception, the user is encouraged to try to correct the interference.

This document was prepared using VAX DOCUMENT Version 2.1.

EC Notice: This equipment complies with CE Class B requirements.

EU-Hinweis: Dieses Gerät entspricht den EU-Bestimmungen der Klasse B.

Avis de conformité aux normes CEE : Cet équipement est conforme aux normes CEE pour la classe B.

Acoustics: Preliminary declared values per ISO 9296 and ISO 7779:

	Sound Power Level L_{wAd}, B	**Sound Pressure Level L_{pAm}, dBA (Bystander Positions)**
Idle (lightly loaded)	6.3	45
Operating (lightly loaded)	6.4	45
Idle (fully loaded)	6.4	45
Operating (fully loaded)	6.5	45

Current values for specific configurations are available from Digital representatives. 1 B = 10 dBA.

Schallemissionswerte: Verläufige Werteangaben nach ISO 9296 und ISO 7779/DIN EN27779:

	Schalleistungspegel L_{wAd}, B	**Schalldruckpegel L_{pAm}, dBA (Zuschauerpositionen)**
Leerlauf (leicht belastet)	6,3	45
Betrieb (voll belastet)	6,4	45
Leerlauf (leicht belastet)	6,4	45
Betrieb (voll belastet)	6,5	45

Aktuelle Werte für spezielle Ausrüstungsstufen sind über die Digital Equipment Vertretungen erhältlich. 1 B = 10 dBA.

Contents

Preface xiii

1 Basic Operation

Before Using this Guide 1–1
In This Chapter 1–2
System Features 1–3
Overview 1–3
Characteristics 1–3
Architecture 1–5
Environmental and Power Requirements 1–6
In This Section 1–6
System Dimensions 1–6
Environmental Specifications 1–7
Power Requirements 1–8
Power Cords 1–9
Moving the System 1–10
Repositioning the System 1–10
Opening the System Door 1–11
Turning the System On 1–12
Overview 1–12
Checking System Settings 1–13
Powering Up the System 1–14
Displaying Power-Up Information 1–14
Checking the Power-Up Displays 1–16
Preboot Tasks 1–20
Booting an Operating System 1–23
Autobooting an Operating System 1–25
Powering Down the System 1–26
Before You Begin 1–26
Turning Off DC Power 1–26
Extended Power-Down (AC Power) 1–27
Invoking Console Mode 1–28

Console Subsystem 1–28
Console Terminal 1–28
Console Mode 1–28
Invoking Console Mode 1–28
Remote Access 1–29
Switching Between Operating Systems 1–29
Network Options 1–31
Overview 1–31
Connecting Peripherals 1–32
Serial/Parallel Connections 1–32
Terminal Connections 1–34
Operating Storage Devices 1–36
Overview 1–36
For Additional Information 1–36
Before You Operate Mass Storage Devices 1–36
Identifying Mass Storage Compartments 1–37
Operating Storage Devices 1–37
Operating a CD–ROM Drive 1–38
CD–ROM Drive Description 1–38
Caddyless Drive 1–38
Drive with Caddy 1–40
Inserting and Removing a Compact Disc 1–42
Operating a DAT Tape Drive 1–46
DAT Description 1–46
Inserting a Tape 1–46
Removing a Tape 1–46
Operating a Diskette Drive 1–48
Diskette Drive Description 1–48
Inserting a Diskette 1–48
Removing a Diskette 1–48
Operating a QIC Drive 1–50
QIC Drive Description 1–50
Inserting a QIC Tape 1–50
Removing a QIC Tape 1–50

2 Hardware Components

In This Chapter 2–1
Operator Control Panel (OCP) 2–2
Power-Up Display 2–2
DC On/Off Button 2–2
Halt Button 2–3
Reset Button 2–4

System Front 2–5
Front Components 2–5
System Rear 2–6
Rear Components 2–6
System Door and Cover 2–8
Door Removal 2–8
Cover Removal 2–9
System Module Locations 2–11
Card Cages 2–11
Accessing the Card Cages 2–12
Accessories 2–14
Accessories 2–14

3 Options and Upgrades

In this Chapter 3–1
Upgrade Overview 3–2
Planning Your Upgrade 3–2
Adding Third-Party Devices 3–3
Supported Options 3–4
Supported Options 3–4
Access from the Internet 3–4
Access from CompuServe 3–4
Digital Systems and Options Catalog 3–4
Verifying System Configuration 3–5
Before You Begin 3–5
Firmware Menu Options for Microsoft Windows NT 3–5
Viewing ARC Hardware Display 3–5
Viewing ARC Environment Variables 3–9
ARC Environment Variables 3–10
For More Information 3–11
Firmware Console Commands for DEC OSF/1 and OpenVMS 3–11
show config 3–12
show device 3–14
show memory 3–16
set and show 3–17
System Bus Options 3–18
CPU Modules 3–20
Memory Modules 3–22
Expansion I/O 3–24
EISA Bus Options 3–25
ISA Bus Options 3–27

Identifying ISA and EISA Options 3–29
Configuring EISA and ISA Options 3–30
EISA Configuration Utility 3–30
System Configuration Diskette 3–30
Before You Run the ECU 3–30
Starting the ECU 3–31
Configuring EISA Options 3–34
Configuring EISA/ISA Options 3–36
PCI Bus Options 3–38
Installing PCI Boards 3–39
SCSI Buses 3–40
Internal SCSI Bus 3–41
Configuring the Removable Media Bus 3–41
SCSI Bus Node IDs 3–44
Internal StorageWorks Shelves 3–44
Installing StorageWorks Fixed Disks 3–46
Preferred SWXCR-Ex Cable Routing 3–47
Guidelines for Systems with SWXCR-Ex Controller 3–49
Power Supply Configurations 3–50
Power Supply Modes 3–51
Power Requirements 3–53
Power Ordering Guidelines 3–54

4 Troubleshooting the System

Introduction 4–1
In This Chapter 4–1
Before You Begin 4–2
Determine Service Provider 4–2
Identifying Problems 4–3
Task Overview 4–4
Steps to Identifying a Problem 4–4
Determining Type of Problem 4–5
Types of System Problems 4–5
Reporting Problems to Digital Services 4–6
Pre-Call Checklist 4–6
Digital Support Center Contact Numbers 4–6
Power Problems 4–10
Problems Getting to Console Mode 4–11
Interpreting the Operator Control Panel Power-Up Display 4–12
CPU Failover 4–12
Console Reported Problems 4–15
show fru 4–17

test 4–19
Mass Storage Problems Indicated at Power-Up 4–21
EISA Bus Problems Indicated at Power-Up 4–24
PCI Bus Problems Indicated at Power-Up 4–26
Boot Problems 4–27
Operating System Reported Problems 4–28
Problems with RAID Devices 4–29

Glossary

Index

Examples

1–1 Boot Menu Example 1–19
3–1 Sample Hardware Configuration Display 3–6
3–2 Creating a User-Defined Environment Variable 3–9

Figures

1–1 System Architecture 1–5
1–2 System Dimensions and Service Area 1–6
1–3 Power Requirements 1–8
1–4 Leveler Feet 1–10
1–5 System Keys 1–11
1–6 Powered-Down System Settings 1–13
1–7 Power Up the System 1–15
1–8 Turning Off the System 1–26
1–9 Unplugging AC Power 1–27
1–10 Connecting Serial and Parallel Devices 1–33
1–11 Terminal Connections 1–35
1–12 Storage Compartments 1–37
1–13 Caddyless CD–ROM Drive 1–39
1–14 CD–ROM Drive with Caddy 1–41
1–15 Inserting and Removing a Caddyless Compact Disc 1–43
1–16 Inserting and Removing a CD–ROM Caddy 1–45
1–17 Inserting and Removing a Tape: DAT 1–47
1–18 Diskette Drive and Diskette 1–49

1–19	QIC Tape Drive and QIC Tape	1–50
2–1	Operator Control Panel	2–2
2–2	System Front	2–5
2–3	System Rear	2–6
2–4	Door Removal	2–8
2–5	Cover Removal	2–10
2–6	System Module Locations	2–13
2–7	Accessories	2–15
3–1	Device Name Convention	3–14
3–2	System Bus Option Locations	3–19
3–3	System Bus Configurations with One CPU and Two CPUs	3–21
3–4	ISA and EISA Boards	3–29
3–5	PCI Board	3–38
3–6	Removable-Media Bus Configurations	3–43
3–7	Internal StorageWorks Configuration	3–45
3–8	Installing Hard-Disk Drives	3–47
3–9	Preferred SCSI Cable Routing with SWXCR Controller	3–48
3–10	Power Supply Configurations	3–50
3–11	I/O Backplane Jumpers	3–52
3–12	Current Share Cable Connection	3–53

Tables

1–1	System Characteristics	1–4
1–2	Environmental Specifications	1–7
1–3	Power Cord Order Numbers	1–9
1–7	Interpreting Operator Control Panel Power-Up Display	1–17
1–5	Booting an Operating System for the First Time	1–23
3–1	Device Names	3–8
3–2	ARC Firmware Environment Variables	3–10
3–3	Memory Upgrade Paths	3–23
3–4	Summary of Procedure for Configuring EISA Bus (EISA Options Only)	3–35
3–5	Summary of Procedure for Configuring EISA Bus with ISA Options	3–37
3–6	RAID Subsystem Documentation	3–49

4–1	How to Identify a Problem	4–3
4–2	Steps to Resolving Problems	4–4
4–3	Problem Reference	4–5
4–4	Digital Support Centers	4–7
4–5	Troubleshooting Power Problems	4–10
4–6	Troubleshooting Problems Getting to Console Mode	4–11
4–7	Interpreting Operator Control Panel Power-Up Display	4–14
4–8	Troubleshooting Console Reported Problems	4–15
4–9	Troubleshooting Fixed-Media Problems	4–21
4–10	Troubleshooting Removable-Media Problems	4–23
4–11	Troubleshooting EISA Problems	4–25
4–12	Troubleshooting PCI Problems	4–26
4–13	Troubleshooting Boot Problems	4–27
4–14	Troubleshooting Operating System Reported Errors	4–28
4–15	Troubleshooting RAID Problems	4–29

Preface

Purpose of This Guide

This guide describes how to operate, troubleshoot, and maintain the AlphaServer 2000 computer system.

Online Information

Your system shipment includes a set of diskettes called the ''Fast Track to Information.'' Fast Track is an easy-to-navigate, electronic version of the information in this owner's guide and the information in the *AlphaServer 2000/2100 Firmware Reference Guide*.

You can install Fast Track on any personal computer or laptop computer running Microsoft Windows V3.1 or later or a Windows emulator. You need to have approximately four megabytes available on your designated disk.

Note

Future plans call for the Fast Track to Information to be shipped on CD–ROM with new systems.

Before You Use This Guide

This guide assumes that your system has been installed by a qualified service person and that it is ready for operation.

Caution

Only qualified service persons should install the system. Qualified service persons need not be Digital service representatives, but they should have the technical training and experience necessary:

- To be aware of physical hazards to which they are exposed in performing a task.
- To take measures to minimize danger to themselves and other persons.

If you have not installed the system, refer to the installation document shipped with the system.

Some procedures in this document require you to refer to your operating system documentation. Have your operating system documentation available for use with this guide.

You will need to become familiar with the console firmware interfaces that facilitate interaction between the hardware and the operating system. A document entitled *AlphaServer 2000/2100 Firmware Reference Guide* was included in your system shipment. Be sure to consult this guide as directed.

Who Should Use This Guide

This guide is for system managers and others who perform system management tasks.

Structure of This Guide

This guide contains information about how to use your system to best advantage:

- Chapter 1 introduces the system and describes basic system management tasks.
- Chapter 2 describes system components and their functions.
- Chapter 3 describes how to identify and change your system configuration.

- Chapter 4 explains how to identify and resolve problems that may prevent the system from operating correctly.
- The Glossary defines technical terms related to the AlphaServer 2000 system.

Conventions

The following table lists conventions used in this guide.

Convention	Meaning
Return	A key name enclosed in a box indicates that you press that key.
Ctrl/*x*	Ctrl/*x* indicates that you hold down the Ctrl key while you press another key, indicated here by *x*. In examples, this key combination is enclosed in a box, for example, Ctrl/C.
lowercase	Lowercase letters in commands indicate that commands can be entered in uppercase or lowercase.
Warning	Warnings contain information to prevent personal injury.
Caution	Cautions provide information to prevent damage to equipment or software.
[ ]	In command format descriptions, brackets indicate optional elements.
console command abbreviations	Console command abbreviations must be entered exactly as shown.
`boot`	Console and operating system commands are shown in this special typeface.
italic type	Italic type in console command sections indicates a variable.
< >	In console mode online help, angle brackets enclose a placeholder for which you must specify a value.
{ }	In command descriptions, braces containing items separated by commas imply mutually exclusive items.
❶ ❷ ❸ . . .	In figures, a numbered callout labels a part of the figure. In text, it refers to a labeled part of a corresponding figure.

Warning Symbols

This symbol indicates components that become extremely hot.

This symbol indicates a potential hazard of which you should be aware.

To Find More Information

The Information Map on the following page indicates sources of information for various tasks related to the AlphaServer 2000 system.

AlphaServer 2000 Information Map

Systems and Options

Digital Systems
and Options Catalog

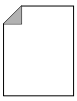

AlphaServer 2000
Information Sheet
EC-F3713-10

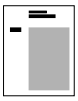

Digital's
Customer
Update

Installation

Systems with Factory Installed Software

Systems without Factory Installed Software

AlphaServer 2000
Basic Installation
EK-400MP-IN

Factory Installed
Software
User Information

OpenVMS AXP
Version 6.1 Upgrade
and Installation Manual
AA-PV6XB-TE

DEC OSF/1
Installation Guide
AA-PSZDD-TE

Customer Information Kit (QZ-01YAA-GZ)

Fast Track to
Information

ECU Diskettes

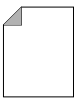

AlphaServer 2000
Read This First
EK-400MP-CL

AlphaServer 2000
Owner's Guide
EK-400MP-OP

AlphaServer 2000/2100
Firmware Reference Guide
EK-AXPFW-RM

Service Information Kit (QZ-01YAA-HC)

Fast Track
to Information
AK-QC7RA-CA
(Service Version)

AlphaServer 2000/2100
Service Guide
EK-KN450-SV.B01

AlphaServer 2000
Illustrated Parts Breakdown
EK-400MP-IP

DSSI VMScluster
Installation and
Troubleshooting
EK-410AB-MG.D01

Training

Alpha Architecture Concepts
EY-N389E (DEC OSF/1)
EY-K725E (OpenVMS)

MA00059

1
Basic Operation

Before Using this Guide

If you have not installed the AlphaServer 2000 system, refer to the installation document shipped with the system.

Some procedures in this document require you to refer to your operating system documentation. Have your operating system documentation available for use with this guide.

You need to become familiar with the console firmware interfaces that facilitate interaction between the hardware and the operating system. A document entitled *AlphaServer 2000/2100 Firmware Reference Guide* was included in your system shipment. Be sure to consult that guide as directed.

In This Chapter

This chapter covers the following information:

- System Features
- Environmental and Power Requirements
- Turning the System On
- Powering Down the System
- Invoking Console Mode
- Network Options
- Connecting to Peripherals
- Operating Storage Devices

System Features

Overview

The AlphaServer 2000 belongs to the AlphaGeneration family of symmetric multiprocessor, server systems based on the Alpha AXP architecture. Supported by the DEC OSF/1, OpenVMS, and Microsoft Windows NT operating systems, the AlphaServer systems are suitable for several computing environments, including general-purpose commercial, high-performance application and database, and PC LAN server.

The AlphaServer 2000 is a small, deskside pedestal system designed for the office environment, where aesthetics and physical size are important considerations, and low to medium disk storage capacities are required. The server's CPU is based on the DECchip 21064 processor chip. More advanced processor versions will become available to allow you to upgrade your processor.

Characteristics

Table 1–1 highlights specific characteristics of your system.

Table 1–1 System Characteristics

Characteristic	Description
Two-processor capability	System can be configured with either one or two processors.
High-performance PCI I/O subsystem	PCI is the emerging industry-standard bus that supports Digital and third-party options. The current implementation of PCI on the server has a peak bandwidth of 132 MB/sec.
EISA I/O bus	33 MB/sec EISA I/O bus supports industry standard EISA options, such as: Network adapters Video/audio options Storage adapters
Flexible mass storage strategy	StorageWorks compatible storage devices provide low-cost, high-capacity flexible configurations.
3.5-in. storage devices	Up to eight 3.5-in. high-performance disk drives can be configured in the BA720 pedestal enclosure, providing many independent disks that can be configured in stripe sets, shadow sets, or RAID sets to optimize performance according to customer requirements.
High availability	With the optional SWXCR RAID controller, your system supports disk hot swap in StorageWorks shelves with all operating systems as well as clustering for OpenVMS. Optional dual power supply provides N+1 redundancy. Multiprocessor systems support CPU failover.
CPU chip technology	The DECchip 21064 is manufactured using Digital's state-of-the-art CMOS process. This process uses a feature size of 0.75 micron. The chip contains 1.7 million transistors on one die.
CPU clock rate	190 MHz to 300+ MHz with advanced processors.
CPU chip design features	Superscalar, superpipelined.
System bus bandwidth	667 MB/sec (128-bit, 24-ns cycle).
Memory	Up to 640 megabytes of main memory.

Architecture

Figure 1–1 illustrates the server system architecture.

Figure 1–1 System Architecture

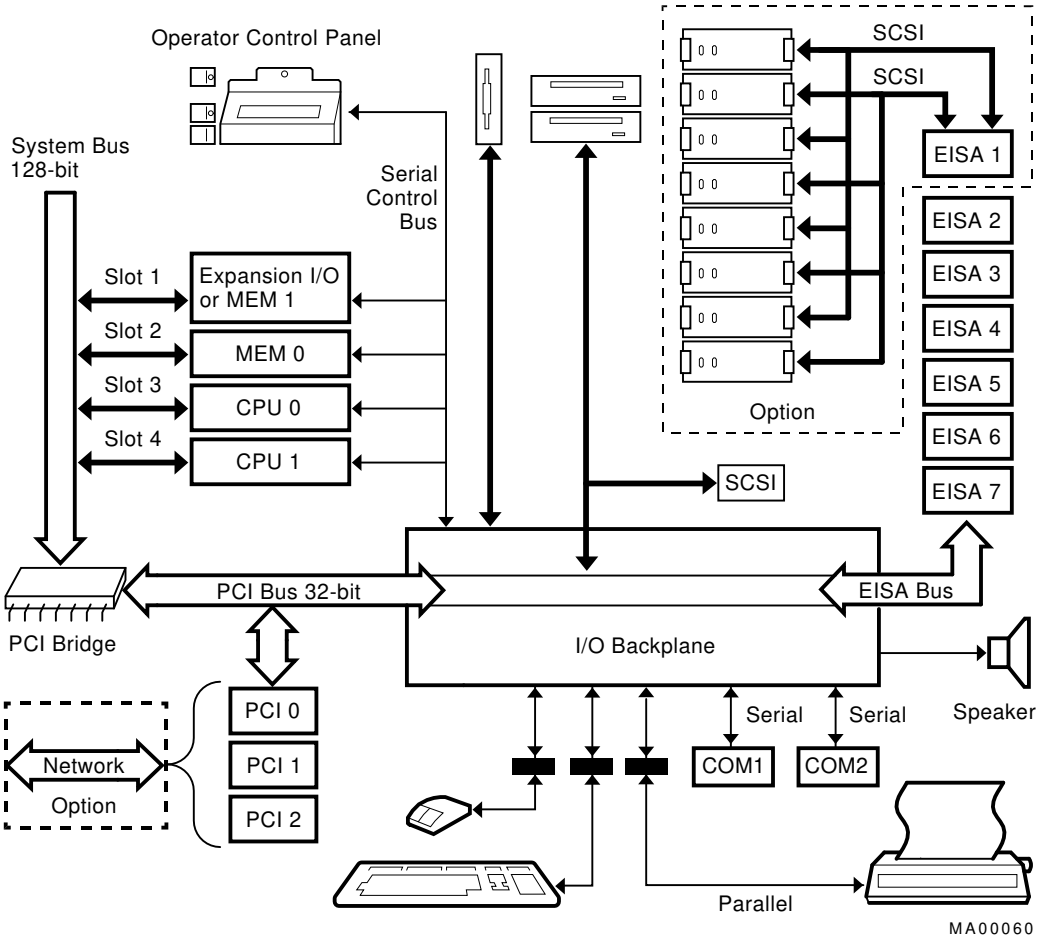

Environmental and Power Requirements

In This Section

This section covers the following information:

- System Dimensions
- Environmental Specifications
- Power Requirements
- Power Cord Numbers
- Moving the System

System Dimensions

Figure 1–2 shows the system dimensions and the clearance area necessary for service access.

Figure 1–2 System Dimensions and Service Area

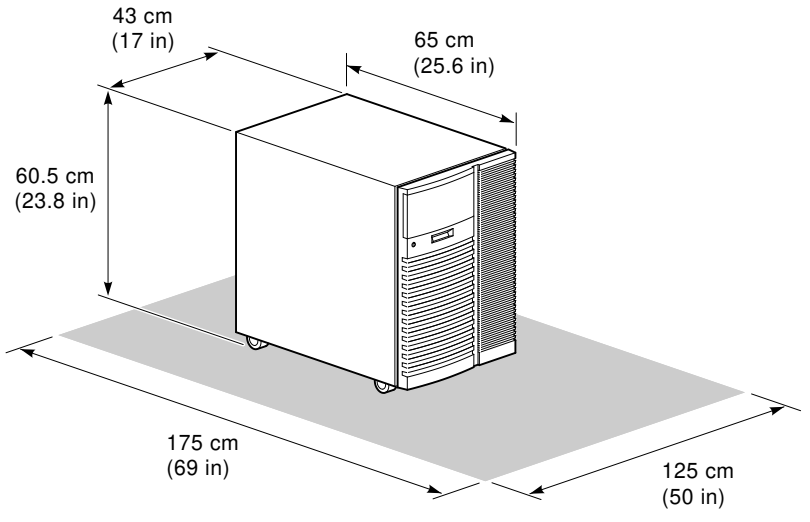

Environmental Specifications

Table 1–2 describes the environmental specifications for your system.

Table 1–2 Environmental Specifications

Specification	Measurement
Operating temperature	10-35° C (50-95° F)
Relative humidity (noncondensing)	20-80%
Maximum heat dissipation	
Single power supply	2390 Btu/hr
Dual power supply	4097 Btu/hr
Minimum operating clearance	
Front	75 cm (29.5 in)
Rear	15 cm (5.9 in)
Maximum operating altitude	2000 m (6562 ft)
Maximum current rating	
Single power supply	8.0/4.0 A
Dual power supply	4.6/2.2 A
Operating voltage range (single phase)	100–120/ 220–240 VAC
Operating frequency range	50 Hz to 60 Hz
Power cord length	190 cm (75 in)

Power Requirements

Depending on what you ordered, your system has either one or two power supplies. Figure 1–3 shows the power requirements for each power supply.

Voltage selection is not required. This equipment automatically senses the voltage and adjusts accordingly.

Warning: Plug this equipment into a properly grounded power receptacle.

Figure 1–3 Power Requirements

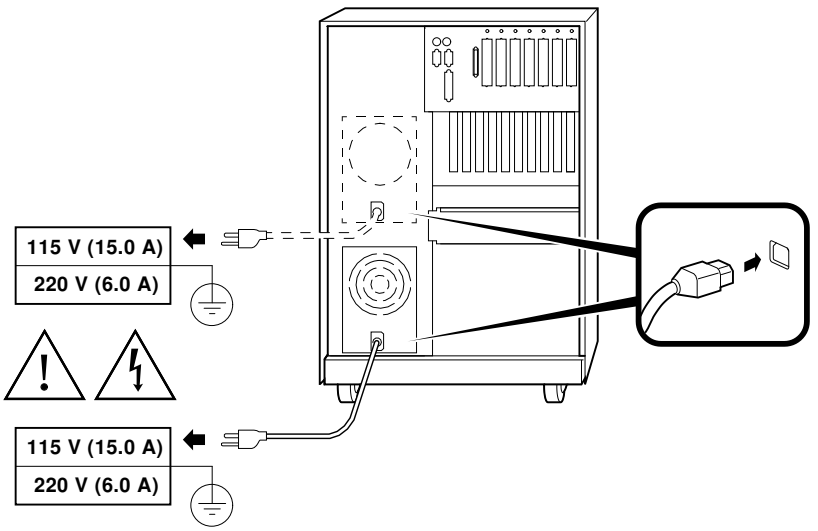

Properly grounded power receptacle

Power Cords

Power cords for your Digital system are country specific. Table 1–3 lists the correct power cord order numbers for various countries.

- Use the power cord BN number to identify the power cord.
- The Digital Number is used by Digital service representatives.

Note

One power cord is required for each power supply in your system. To order, call 1-800-DIGITAL (U.S.A. and Canada) or your authorized Digital distributor.

Table 1–3 Power Cord Order Numbers

Country	Power Cord BN Number	Digital Number
U.S., Japan, Canada	BN09A-1K	17-00083-09
Australia, New Zealand	BN019H-2E	17-00198-14
Central Europe (Aus, Bel, Fra, Ger, Fin, Hol, Nor, Swe, Por, Spa)	BN19C-2E	17-00199-21 right-angle wall plug
U.K., Ireland	BN19A-2E	17-00209-15
Switzerland	BN19E-2E	17-00210-13
Denmark	BN19K-2E	17-00310-08
Italy	BN19M-2E	17-00364-18
India, South Africa	BN19S-2E	17-00456-16
Israel	BN18L-2E	17-00457-16

Moving the System

If you need to move your system to a new environment, be sure you are familiar with the environmental specifications and power cord requirements.

Caution

Only qualified service persons should install the system. Qualified service persons need not be Digital service representatives, but they should have the technical training and experience necessary:

- To be aware of physical hazards to which they are exposed in performing a task.
- To take measures to minimize danger to themselves and other persons.

Repositioning the System

To reposition the system within the same environment, raise the system leveler feet (shown in Figure 1–4) so that they no longer touch the floor, and push the system to the new destination. When you have positioned the system, lower the leveler feet to the floor so that they hold the system stationary.

If you must ship your system to a new location, carefully repackage it so that it can withstand the normal bumps or shocks associated with moving.

Figure 1–4 Leveler Feet

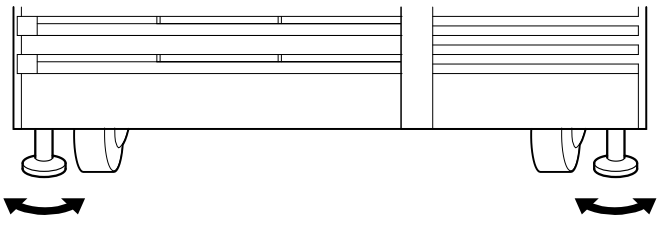

Opening the System Door

The key used to lock and unlock the front door arrived with your system shipment, packaged with the system installation card. The key lock on the front door of the system is shown in Figure 1–5.

Figure 1–5 System Keys

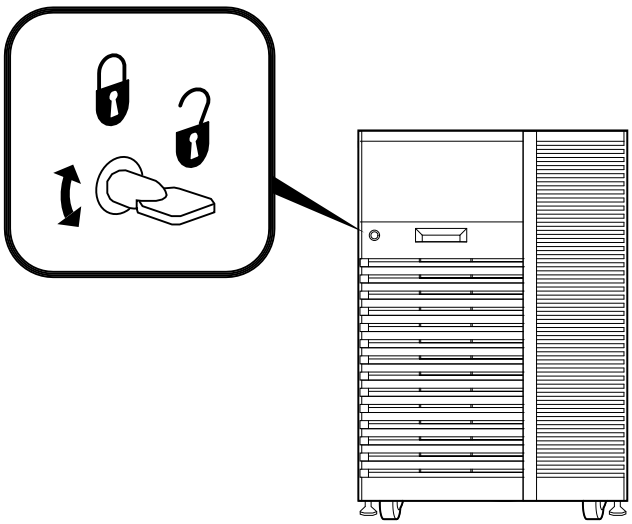

Turning the System On

Overview

Turn on the system in the sequence shown below and described in the following sections:

1. Check System Settings
2. Power Up the System
3. Check Power-Up Display
4. Perform Pre-Boot Tasks
5. Boot Operating System

Checking System Settings

When the system is off, the DC On/Off button is off (O) and the Halt button should be in the ‘‘out’’ position (see Figure 1–6).

DC On/Off

Halt

Reset

Figure 1–6 Powered-Down System Settings

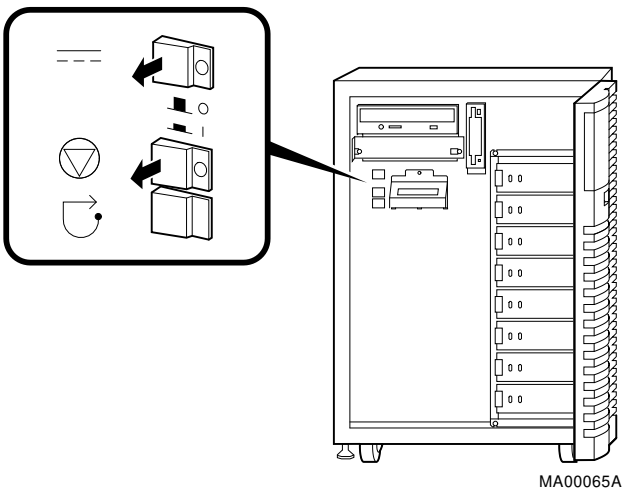

Powering Up the System

1. Be sure the AC power cord for each power supply is plugged in.
2. Power up any external expansion boxes connected to your system, for example, expansion boxes that house storage devices.
3. Turn on the terminal, as in Figure 1–7 ❶.
4. Press the system DC On/Off button to (|), as in Figure 1–7 ❷.

Note

The system cover must be in place and properly secured before you turn on the system unit. A safety interlock switch prevents the system from powering up if the cover is not in place.

Displaying Power-Up Information

Power-up information is typically displayed on the system's console terminal. The console terminal may be either a graphics terminal or a serial terminal connected through the COM1 serial port. The setting of the console environment variable determines where the system will display power-up output. Set this environment variable according to the console terminal being used.

Synopsis:

set console output_device

Arguments:

graphics	Displays the power-up output to a graphics terminal or device connected to the VGA module at the rear of the system.
serial	Displays the power-up output to a device connected to the COM1 port at the rear of the system.

Example:

```
P00>>> set console serial
P00>>> init
 . . .
```

Figure 1–7 Power Up the System

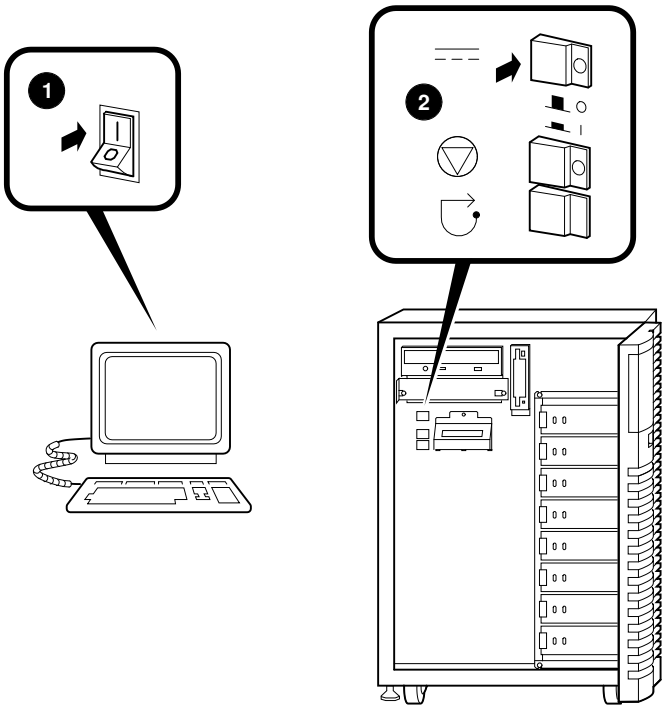

Checking the Power-Up Displays

After you power up the system, check the status of three diagnostic indicators: the power-up/diagnostic display on the operator control panel, the system startup screen display, and the console prompt (DEC OSF/1 or OpenVMS systems) or Boot menu (Microsoft Windows NT systems).

If any of the diagnostic indicators do not appear as described, refer to Chapter 4 for help.

Operator Control Panel Power-Up/Diagnostic Display

The power-up/diagnostic display located on the operator control panel on the front of the system displays the results of system self-tests during power-up.

As self-tests begin, the power-up/diagnostic display shows the following message for several seconds:

```
starting console
```

When the system has completed self-tests, the message `Model x/xxx` is displayed, where *x* represents the CPU variant and *xxx* represents the system model number—for example, `Model 4/200`.

You can customize this message for your system by changing the value of the ocp_text environment variable. Refer to the section on the `set ocp_text` command in the *AlphaServer 2000/2100 Firmware Reference Guide*.

Table 4–7 describes how to interpret messages on the power-up display.

Note

AlphaServer 2000 systems offer high-availability ‘‘CPU failover’’ functionality. On multiprocessor systems, the failover feature allows the system to power up and boot the operating system even if one CPU has failed. The `CPU STATUS` message described in Table 4–7 indicates the status of each CPU. For more information on CPU failover, see Chapter 4.

Table 1–7 Interpreting Operator Control Panel Power-Up Display

Message	Meaning
TEST	Displayed while the system performs diagnostic tests and exercisers. The type of module under test, its slot number, and the currently executing test number, are also displayed.
NO MEM INSTALLED	Displayed if you power up with no memory installed.
FAIL *module_type*	If an error is detected in the CPU, memory, or I/O, a failure message is displayed and the Halt button LED lights for a few seconds. The error is logged to the appropriate module via the serial control bus. In nearly all cases, the power-up tests continue. The *module_type* and slot number for the module that failed, along with the test number that detected the error are also displayed. Module types and/or slot numbers: CPU_nn — CPU module (0 or 1) MEM_nn — Memory module (0 or 1) I/O_0 — I/O backplane I/O_1 — Expansion I/O module (PCI)
CPU STATUS	Summary of CPU testing—The status of each CPU from right to left, starting with CPU0 is displayed: ''P'' — CPU passed ''F'' — CPU failed ''–'' — CPU not present
STARTING CPU #	The console is starting the primary CPU.
TEST MEM BANK #	The console is testing memory.
PROBE I/O SUBSYS	The console is checking the PCI and EISA bridges.
SYSTEM RESET	The Reset button has been pressed.
Model x/xxx	When the system is under operating system control, the CPU variant (*x*) and system model number (*xxx*) are displayed unless you supply your own text using the ocp_ text environment variable.

System Startup Screen

The system startup screen scrolls. To stop the screen display from scrolling, enter Ctrl/S. To resume scrolling, enter Ctrl/Q.

The screen display looks similar to the following example:

```
starting console on CPU 0
   .
   .
   .
Configuring Memory Modules
Configured memory size = 10000000
Memory Diagnostics completed
probing hose 0, PCI
bus 0, slot 1 -- pka -- NCR 53C810
bus 0, slot 2 --     -- Intel 82375EB
probing hose 1, EISA
slot 1 -- pkb -- ADP0001
slot 2 -- era -- DEC4220
slot 7 -- vga -- CPQ3011
probing hose 2, PCI
initializing keyboard
starting console on CPU 1
initialized idle PCB
initializing idle process PID
lowering IPL
counted 18556138 cycles in 100 ticks
CPU 1 speed is 5.26 ns (190MHz)
Memory Testing and Configuration Status
Module   Size    Base Addr   Intlv Mode  Intlv Unit  Status
------   -----   ---------   ----------  ----------  ------
  0      128MB   00000000      2-Way         0       Passed
  1      128MB   00000000      2-Way         1       Passed
Total Bad Pages 0
Testing the System
Testing the Disks (read only)
No EWA0 network available for testing
AlphaServer 2000 Console X3.7-10272, built on Sep  8 1994 at 10:10:17
```

Console Prompt or Boot Menu

The next display on your console terminal depends on the operating system you installed. On AlphaServer systems, a console subsystem containing firmware code (software code embedded in the hardware) controls system initialization and bootstrapping.

There are two versions of the firmware. SRM firmware supports the DEC OSF/1 and OpenVMS operating systems. ARC firmware supports the Microsoft Windows NT operating system. Consult the *AlphaServer 2000/2100 Firmware Reference Guide* for detailed information on the console firmware.

DEC OSF/1 or OpenVMS Console Prompt

If you are going to boot DEC OSF/1 or OpenVMS, the following console prompt for the SRM firmware should be displayed:

```
P00>>>
```

Microsoft Windows NT Boot Menu

If you are going to boot Microsoft Windows NT, the Boot menu should be displayed:

Example 1–1 Boot Menu Example

```
ARC Multiboot Alpha AXP Version n.nn
Copyright (c) 1993 Microsoft Corporation
Copyright (c) 1993  Digital Equipment Corporation

Boot menu:

   Boot Windows NT
   Boot an alternate operating system
   Run a program
   Supplementary menu...

Use the arrow keys to select, then press Enter.
```

Note

If you do not see either a console prompt or the Boot menu, press Return several times.

If the screen display on your terminal does not correspond to the operating system that you plan to boot, switch to the other console firmware as described below.

Switching from SRM to ARC

To switch from the SRM console to the ARC console, enter the `arc` command:

```
P00>>> arc
```

Once the console firmware is loaded and the system is initialized, the first screen of the ARC console is displayed.

Switching from ARC to SRM

Switch from the ARC console to the SRM console as follows:

1. From the Boot menu, select `Supplementary menu`.
2. From the Supplementary menu, select `Set up the system . . . .`
3. From the Setup menu, select `Switch to OpenVMS or OSF console.`
4. Select your operating system console, then select the Setup menu and press Enter.
5. When the message `Power-cycle the system to implement the change` is displayed, press the Reset button.

Once the console firmware is loaded and the system is initialized, the SRM console prompt is displayed.

Preboot Tasks

You may need to perform some of the following tasks before booting your operating system.

- Run the EISA Configuration Utility.
- Check required environment variable settings.
- Change the way your system powers up or boots.

- Verify your configuration.

The remainder of this section contains more information about each of these tasks.

Run the EISA Configuration Utility.

If you have added, removed, or moved an EISA or ISA board, you must run the EISA Configuration Utility before booting the operating system. See ''EISA Bus Options '' in Chapter 3.

Check Required Environment Variable Settings—DEC OSF/1 or OpenVMS.

If you are running DEC OSF/1 or OpenVMS, you may want to check that settings for the following variables match your configuration. The console command you use to reset the variable is shown in parenthesis. For more information about each console command, refer to the *AlphaServer 2000/2100 Firmware Reference Guide*.

- Operating system (`set os_type`)
- Console display device type (`set console`)
- Speed for Fast SCSI devices (`set pk*0_fast`)
- Boot device (`set bootdef_dev`)
- Boot flags (`set boot_osflags`)

Change Default Power-Up or Bootstrap.

If you want to change the way the system powers up or boots the operating system, you need to change default values for your system's environment variables. Typical changes would be to set the system to autoboot or to change the default boot device.

- For information about changing these variables on a DEC OSF/1 or OpenVMS system, refer to the *AlphaServer 2000 /2100 Firmware Reference Guide*.
- Microsoft Windows NT systems boot automatically. If you do not want your Windows NT system to boot automatically, select `Set up autoboot` from the Setup menu and choose `No` when prompted. Refer to the *AlphaServer 2000/2100 Firmware Reference Guide* for more information.

Verify Your Configuration.

- DEC OSF/1 or OpenVMS

  Use the following SRM console commands to verify your system configuration.

  — `show config`—Displays the buses on the system and the devices found on those buses.

  — `show device`—Displays the devices and controllers in the system.

  — `show memory`—Displays main memory configuration.

  — `set` and `show`—Set and display environment variable settings.

  For more information about these commands, refer to Chapter 3.

- Microsoft Windows NT

  The ARC menu item `Display hardware configuration` displays the system's hardware configuration, including the ARC boot device names for devices installed in the system. For more information about this menu option, refer to Chapter 3.

  For a more complete listing of the options that are recognized by your system, you may want to enter the SRM commands listed previously for DEC OSF/1 and OpenVMS systems.

  To enter SRM commands, you must switch from the ARC to the SRM console. For information about switching to the SRM console, refer to ''Switching from ARC to SRM,'' earlier in this chapter. Switch back to the ARC console before booting the Microsoft Windows NT operating system.

Booting an Operating System

You can boot one of the following operating systems:

- DEC OSF/1
- OpenVMS
- Microsoft Windows NT

The instructions in this section assume that you have already booted your operating system at least once. If you have not booted the operating system at least once, refer to Table 1–5 for possible next steps.

Table 1–5 Booting an Operating System for the First Time

Condition	Reference
If you have not booted Factory Installed Software	See the Factory Installed Software (FIS) document that came with your system.
If your operating system was not factory installed, and you have not loaded or booted the operating system	See the installation document that came with your operating system.

Booting DEC OSF/1 or OpenVMS Software

If you are booting either DEC OSF/1 or OpenVMS, the SRM console prompt `P00>>>` should be displayed. Boot the operating system as follows:

Step	Action
1	Enter `boot` or `b` at the console prompt. `P00>>> b` The system boots the operating system using default values for the boot device and boot flags. A ''booting system software'' screen is displayed on your console terminal. After several minutes, the operating system login banner is displayed on your console terminal.
2	Log in at the login prompt. When the operating system prompt is displayed, you can begin normal operation.

For information about specifying an alternative boot device or boot flags, refer to the `boot` command section in the *AlphaServer 2000/2100 Firmware Reference Guide*.

Booting Microsoft Windows NT Software

If you are booting Microsoft Windows NT, the Windows NT Boot menu (Example 1–1) should be displayed.

Microsoft Windows NT boots automatically after the Boot menu is displayed for the specified countdown period.

Autobooting an Operating System

If the system is set to autoboot, the operating system boots automatically after you power up the system, after you press the Reset button, or after recovery from a system crash.

DEC OSF/1 or OpenVMS

1. Set the auto_action environment variable to either ‘‘boot’’ or ‘‘restart.’’ For more information, refer to the `set auto_action` command in the *AlphaServer 2000/2100 Firmware Reference Guide*.
2. Ensure that the default boot device has been set to the device from which you want the operating system to boot. Enter `show bootdef_dev` to see whether your default boot device has already been assigned. For information about setting the default boot device, refer to the `set bootdef_dev` command in the *AlphaServer 2000/2100 Firmware Reference Guide*.
3. Enter the `init` command.

Microsoft Windows NT

The Windows NT operating system autoboots by default. If your system does not autoboot, set the system to autoboot by following the instructions in the *AlphaServer 2000/2100 Firmware Reference Guide*.

Powering Down the System

Before You Begin

You may not need to power down the system to recover from some hangs and other problems. First try pressing the Reset button on the operator control panel.

Turning Off DC Power

To turn off your system:

1. Shut down the operating system. Refer to the shutdown procedure in your operating system documentation.
2. After you shut down the operating system, press the DC On/Off button to (O), as shown in Figure 1–8.
3. Set the Halt button to the ‘‘out’’ position. If the Halt button is in, the system will not boot when you power up.

Figure 1–8 Turning Off the System

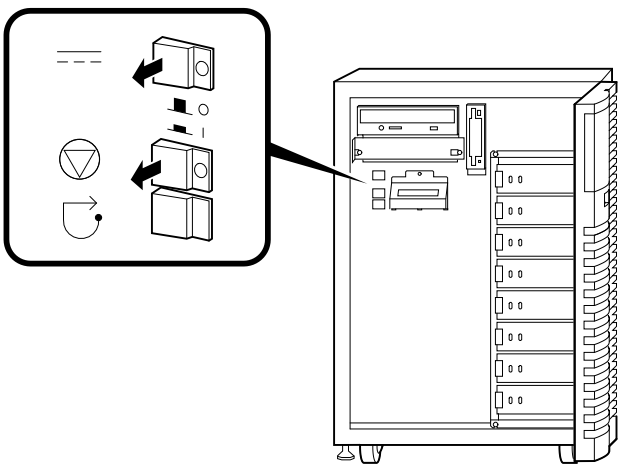

Extended Power-Down (AC Power)

If an extended power-down is required, first turn off DC power as described in the previous section. Next, unplug AC power as shown in in Figure 1–9:

Caution

If two power supplies are present, unplug the AC power cord for each power supply.

Figure 1–9 Unplugging AC Power

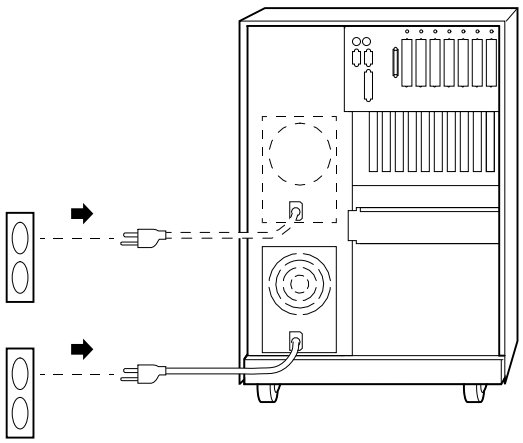

Invoking Console Mode

Console Subsystem

On AlphaServer systems, underlying control of the system platform hardware is provided by a console subsystem. The console subsystem contains firmware code (software code embedded in the hardware) that offers service functions such as initializing and testing the hardware and bootstrapping the system software. Because the AlphaServer 2000 supports multiple operating systems, the server has two different versions of console firmware. They are explained in detail in the *AlphaServer 2000/2100 Firmware Reference Guide*.

Console Terminal

A console terminal is required for your system. You can connect either a VGA monitor or a Digital VT-series terminal or equivalent. The console terminal is used to configure the system and boot the operating system. From the console terminal, you can issue commands to the system while the operating system is not running.

Console Mode

Console mode is the state in which the system and the console terminal operate under the control of the console firmware rather than the operating system. When you issue commands from the console terminal and firmware is executing, you are in console mode.

On DEC OSF/1 and OpenVMS systems, the console mode prompt is `P00>>>`. You can use control characters and supported keys to enter console commands at the console mode prompt.

On Microsoft Windows NT systems, a menu interface is used in console mode.

Invoking Console Mode

Invoke console mode by shutting down the operating system according to the operating system shutdown procedure described in your operating system documentation.

Pressing the Halt button on the operator control panel invokes console mode if you are running DEC OSF/1 or OpenVMS. However, invoke console mode with the Halt button only if you are unable to shut down the DEC OSF/1 or OpenVMS operating system using the proper software shutdown procedure. Pressing

the Halt button has no effect if you are running Microsoft Windows NT.

For more information about using the Halt button, refer to Figure 2–1.

Remote Access

If you are running DEC OSF/1 or OpenVMS, you can invoke console mode from a remote terminal that is connected to your system through the COM2 port at the rear of the system. (See Figure 1–10.)

1. Connect to your system from the remote terminal.
2. Shut down the operating system.
3. When the shutdown has completed, press Return.
   The console prompt `P00>>>` is displayed.

Switching Between Operating Systems

You can switch between the operating systems that you have installed on the AlphaServer 2000 system by following the instructions below. Become familiar with the ARC and SRM console firmware and the EISA Configuration Utility before you begin.

Caution

You must run the EISA Configuration Utility when you switch between Microsoft Windows NT and DEC OSF/1 or OpenVMS. Not all options are supported under all of the operating systems. Before you run the ECU, check the *Digital Systems and Options Catalog* for the requirements for the operating system to which you are switching.

Switching Between DEC OSF/1 and OpenVMS

1. Invoke the SRM console mode by shutting down the operating system, using the proper software shutdown procedure.
2. Follow the operating system boot procedure for either DEC OSF/1 or OpenVMS.

Switching from DEC OSF/1 or OpenVMS to Microsoft Windows NT

1. Invoke the SRM console mode by shutting down the operating system, using the proper software shutdown procedure.
2. Insert the ECU diskette containing the configuration files for Microsoft Windows NT.
3. Run the EISA Configuration Utility (ECU) from that diskette.

   For information about running the ECU, refer to ‘‘Configuring EISA Options ’’ in Chapter 3.
4. Remove the ECU diskette. At this point, you are using the ARC console.
5. Boot Microsoft Windows NT from the Boot menu.

Switching from Microsoft Windows NT to DEC OSF/1 or OpenVMS

1. If you are booting DEC OSF/1 or OpenVMS, select `Switch to OpenVMS or OSF console` from the Setup menu and press Enter.
2. Insert the ECU diskette containing the configuration files for DEC OSF/1 and OpenVMS.
3. Run the EISA Configuration Utility (ECU) from that diskette.

   For information about running the ECU, refer to ‘‘Configuring EISA Options ’’ in Chapter 3.
4. Remove the ECU diskette.
5. Follow the operating system boot procedure for either DEC OSF/1 or OpenVMS.

Network Options

Overview

The AlphaServer 2000 can support a variety of network options. If you plan to connect your server to a network, you need to purchase an EISA or PCI network adapter. The adapter can be connected to the appropriate bus on the server.

For instructions on connecting your system to a network, consult the documentation that you receive when you purchase your network adapter.

Connecting Peripherals

Serial/Parallel Connections

Connect a serial or parallel printer, modem, or console terminal to your system through the serial and parallel ports at the rear of the system (Figure 1–10).

For information about connecting a specific device to your system, refer to the documentation for that device.

Figure 1–10 Connecting Serial and Parallel Devices

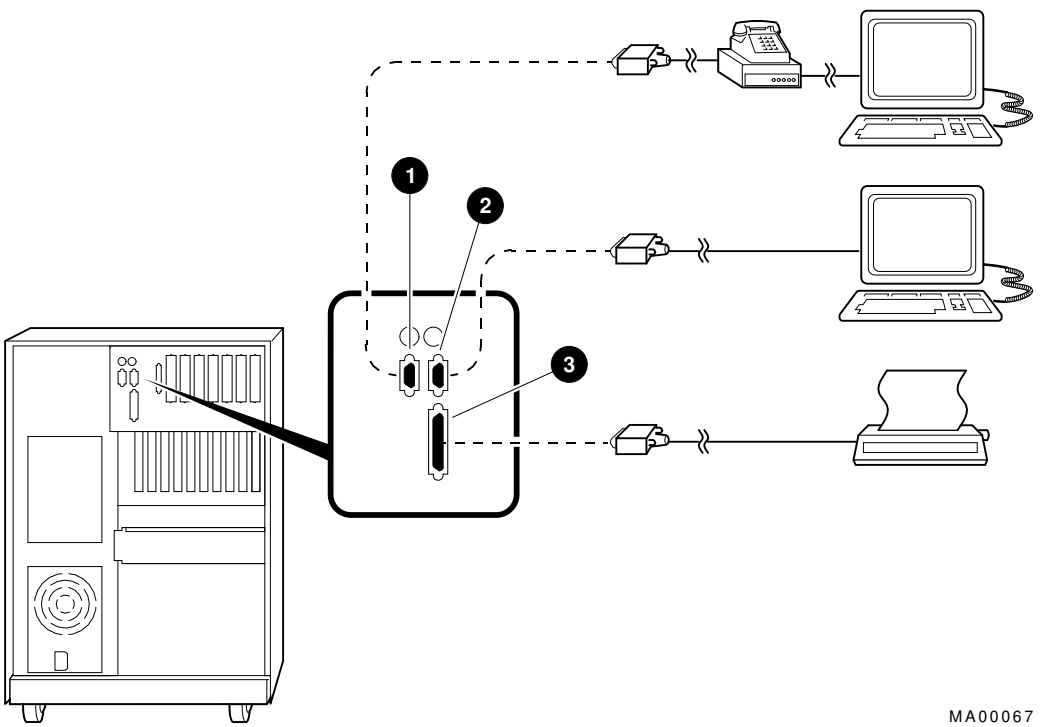

❶ Serial Port (COM2) (modem that connects to auxiliary console device)

❷ Serial Port (COM1) (console terminal—VTxxx or equivalent)

❸ Parallel Port (printer port)

Terminal Connections

You can connect either a VGA monitor or a Digital VT–series terminal (VTxxx) or equivalent to your system as shown in Figure 1–11. For information about connecting a specific terminal to your system, refer to the documentation for that terminal.

Note

The cable that connects to the rear of the VGA terminal has multiple plugs. These plugs are either color-coded or coded by letters that indicate the color. Use the coding on the cable and the corresponding coding on the terminal to determine where to attach each cable plug.

Figure 1–11 Terminal Connections

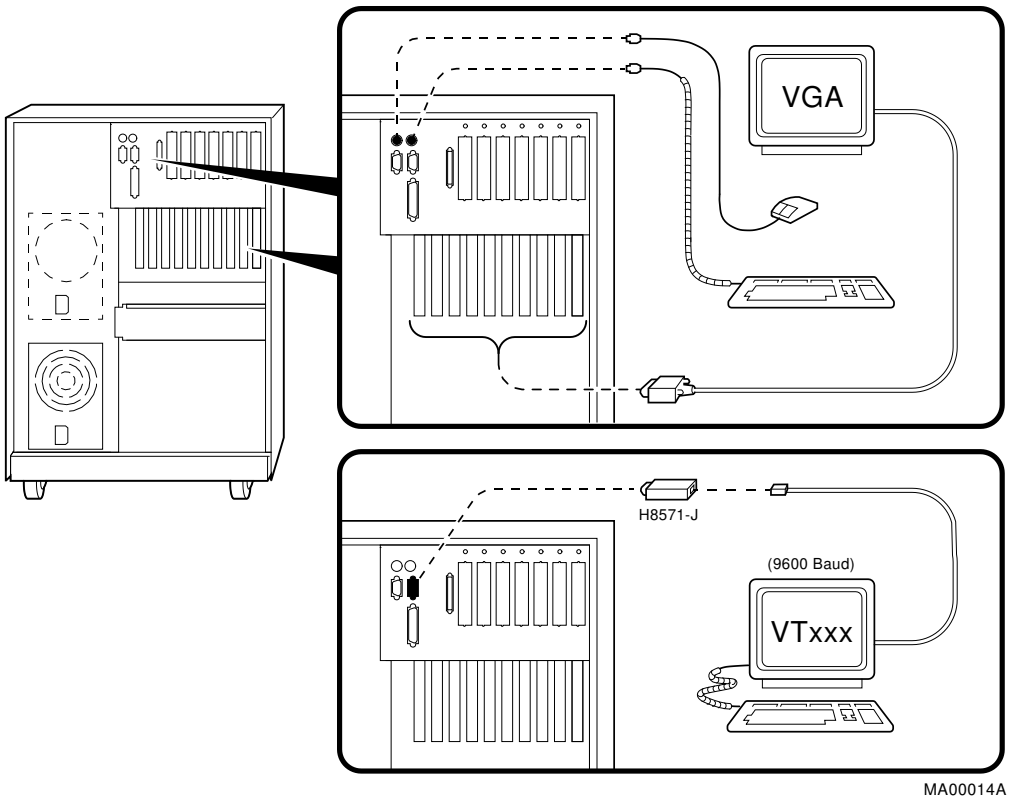

Note

The optional H8571-J adapter connects a VT-series terminal or equivalent. If you did not order the adapter with your system, call 1-800-DIGITAL (U.S.A. and Canada) or your authorized Digital distributor to order the adapter.

Operating Storage Devices

Overview

Mass storage devices are drives that are used to store large amounts of data for extended periods.

For Additional Information

This section describes how to insert and remove media into removable-media drives. For more information about a specific drive, refer to the documentation for that drive.

Before You Operate Mass Storage Devices

Before operating mass storage devices:

- Set up the device.

  Typically, you must set up a device before you can begin using it. You set up a device while the operating system is running.

  — On DEC OSF/1 systems, use the `mount` command.

  — On OpenVMS systems, use the `MOUNT` command.

  — On Microsoft Windows NT systems, use the Disk Administrator.

  Refer to your operating system documentation for more information about how to set up a device.

- Familiarize yourself with the care and maintenance required by the device.

  Refer to the option documentation for care instructions for each option.

Identifying Mass Storage Compartments

Mass storage devices are located in several compartments inside your system, as shown in Figure 1–12.

❶ Removable-media storage device area (holds up to two 5.25-inch half-height drives).

The illustration shows a CD–ROM drive installed.

❷ Diskette drive.

❸ StorageWorks shelf (holds up to eight 3.5-inch StorageWorks hard-disk drives).

Operating Storage Devices

The remaining sections of this chapter describe how to operate removable-media mass storage devices.

Figure 1–12 Storage Compartments

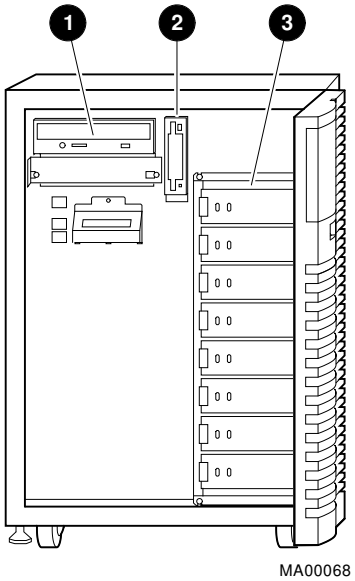

Operating a CD–ROM Drive

CD–ROM Drive Description

CD–ROM drives read information from removable, read-only compact discs.

Your system may have one of two types of CD–ROM drives: a caddyless drive or one that must be used with a disc caddy.

Caution

Handle a disc by its edges. Do not touch the surface of a disc. Fingerprints and dust can render the disc unreadable.)

Caddyless Drive

Figure 1–13 shows the components of a caddyless CD–ROM drive.

❶ Compact disc

❷ Headphone port

❸ Headphone volume control

❹ Busy light

❺ Eject button

❻ Manual eject hole

Figure 1–13 Caddyless CD–ROM Drive

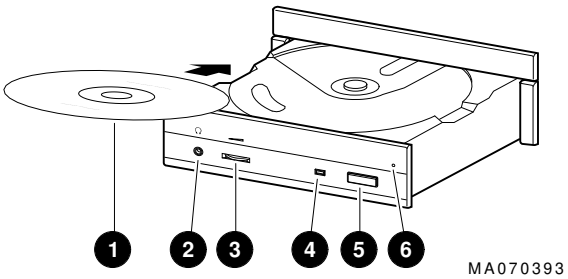

Drive with Caddy

Figure 1–14 shows the components of a CD–ROM drive with a disc caddy.

❶ Headphone port

❷ Headphone volume control

❸ Disc caddy slot

❹ ID dimple

❺ Busy light

❻ Eject button

❼ Manual eject hole

❽ CD–ROM caddy

❾ Compact disc

Figure 1–14 CD–ROM Drive with Caddy

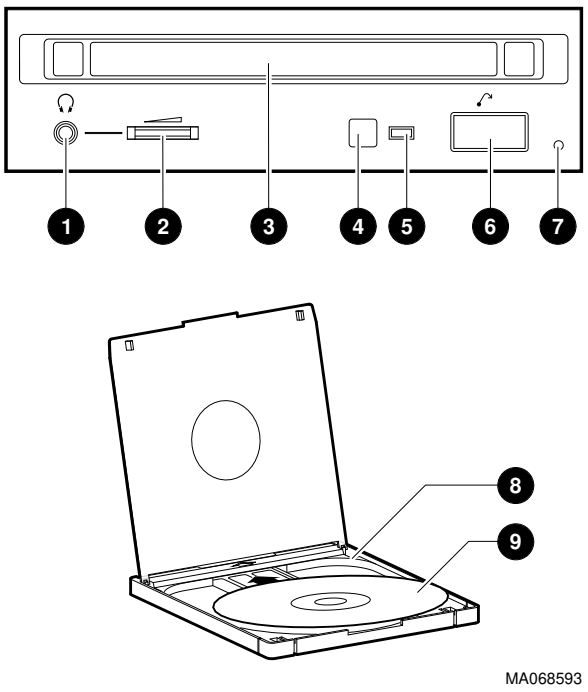

Inserting and Removing a Compact Disc

Caddyless Drives

Insertion: (Figure 1–15):

1. Press the drive Eject button (❶). The disc drawer ejects part way.
2. Using one finger, gently pull the disc drawer far enough out so that you can insert the compact disc.
3. Insert the disc into the drawer.
4. Push the drawer back in.

   The busy light comes on. When the busy light goes off, the drive is ready to use. To operate the drive, follow the instructions provided with your system software.

Removal: (Figure 1–15):

1. Press the drive Eject button (❶). The disc drawer ejects part way.
2. Using one finger, gently pull the drawer out far enough so that you can remove the compact disc.
3. Remove the compact disc.
4. Push the drawer back in.

Figure 1–15 Inserting and Removing a Caddyless Compact Disc

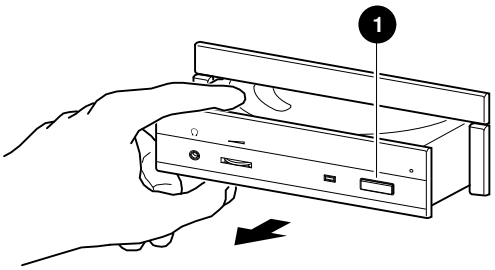

Drives with Caddy

Insertion: (Figure 1–16):

1. Gather both the caddy and the disc you wish to insert.
2. If there is a protective film on the center of the caddy lid, remove the film ❶.
3. Open the caddy by pressing the tabs on both sides of the caddy at the end opposite the shutter ❷.
4. Set the disc, printed side up, into the caddy ❸.
5. Press firmly on both corners to close the caddy lid.
6. Insert the caddy into the drive ❹. Push the caddy gently into the drive as far as it will go. The caddy should be completely inside the drive when properly inserted.

   The busy light comes on when the caddy has been inserted correctly.
7. When the busy light goes off, the drive is ready to use. To operate the drive, follow the instructions provided with your system software.

Removal: (Figure 1–16):

1. Press the Eject button ❺. The caddy ejects part way.
2. Remove the caddy from the drive.

Figure 1–16 Inserting and Removing a CD–ROM Caddy

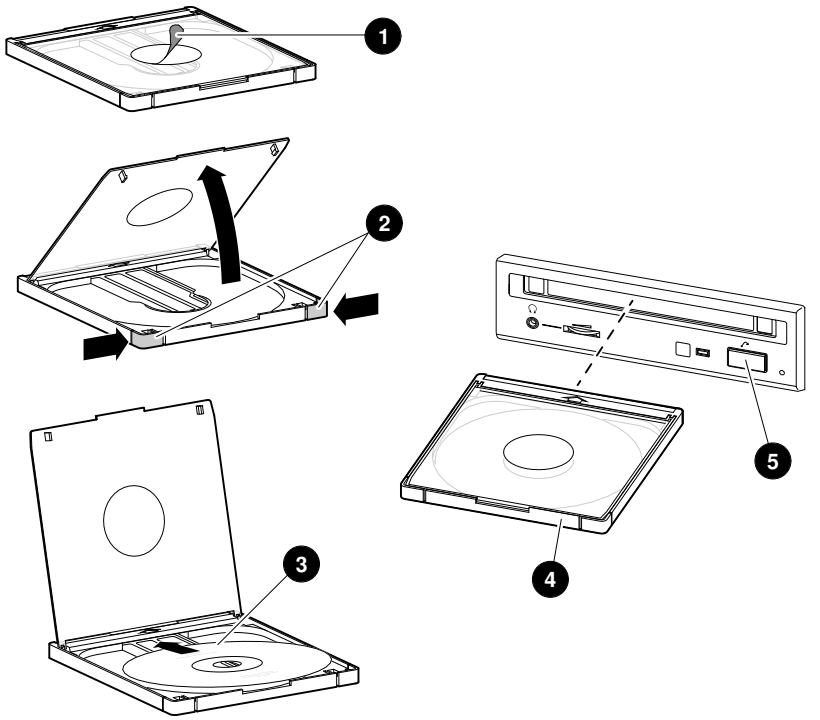

Operating a DAT Tape Drive

DAT Description

A DAT tape drive stores information on removable tape cartridges. Figure 1–17 shows the components of a DAT drive.

❶ Tape/activity light

❷ Write-protect light

❸ Tape cassette slot

❹ Tape unload button

❺ Tape cassette

❻ Write-protect switch (write-protected position)

❼ Write-protect switch (write-enabled position)

Inserting a Tape

To insert the tape into a DAT drive (Figure 1–17):

1. Check to see that the tape/activity light ❶ on the drive is unlit. If it is lit, there is already a tape in the drive. Remove the tape from the drive before continuing. (See ‘‘Removing a Tape.’’)
2. Set the write-protect switch on the tape that you wish to insert to either the write-protected ❻ or write-enabled ❼ position.
3. Insert the tape into the drive, with the tape oriented as shown in ❺.

Removing a Tape

To remove a tape from a DAT drive (Figure 1–17):

1. Check to see that the tape/activity light ❶ is on steady green (not flashing). If the tape/activity light is flashing, the drive has not finished completing a data transfer. Wait until the tape/activity light comes on steady green before proceeding.
2. Press the unload button ❹ to eject the tape. The tape ejects part way.

3. Remove the tape from the drive.

Figure 1–17 Inserting and Removing a Tape: DAT

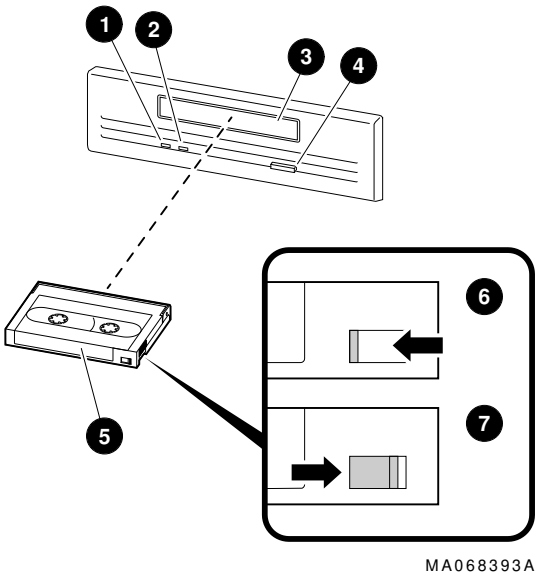

Operating a Diskette Drive

Diskette Drive Description

Diskette drives read information from, or write it to, removable diskettes. Figure 1–18 shows a diskette and the components of a diskette drive.

❶ Eject button

❷ Busy light

❸ Write-protect switch

❹ Write-protect switch (write-protected position)

❺ Write-protect switch (write-enabled position)

One diskette drive is located to the left of the removable-media mass storage compartment.

Inserting a Diskette

Insert a diskette into a diskette drive (Figure 1–18):

1. Set the write-protect switch on the diskette ❸ to either the write-protected ❹ or write-enabled ❺ position.
2. Insert the diskette into the drive as shown.

Removing a Diskette

Remove a diskette by pressing the Eject button on the diskette drive (❶ in Figure 1–18):

Figure 1–18 Diskette Drive and Diskette

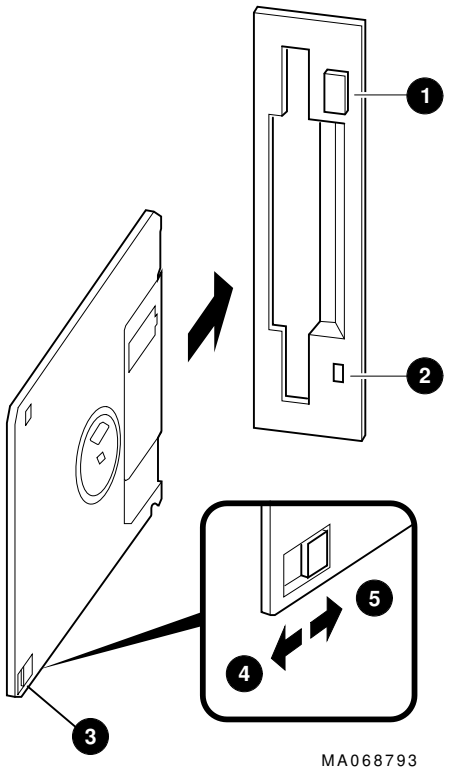

Operating a QIC Drive

QIC Drive Description

QIC tape drives read information from or write it to removable tapes. Figure 1–19 shows a QIC tape drive and a compatible tape.

Inserting a QIC Tape

Insert a QIC tape into a QIC tape drive as follows:

1. Set the write-protect switch on the tape to either the write-protected ❶ or write-enabled ❷ position.
2. Insert the tape into the drive ❸.

Removing a QIC Tape

Remove a QIC tape by pressing the Eject button on the QIC tape drive ❹:

Figure 1–19 QIC Tape Drive and QIC Tape

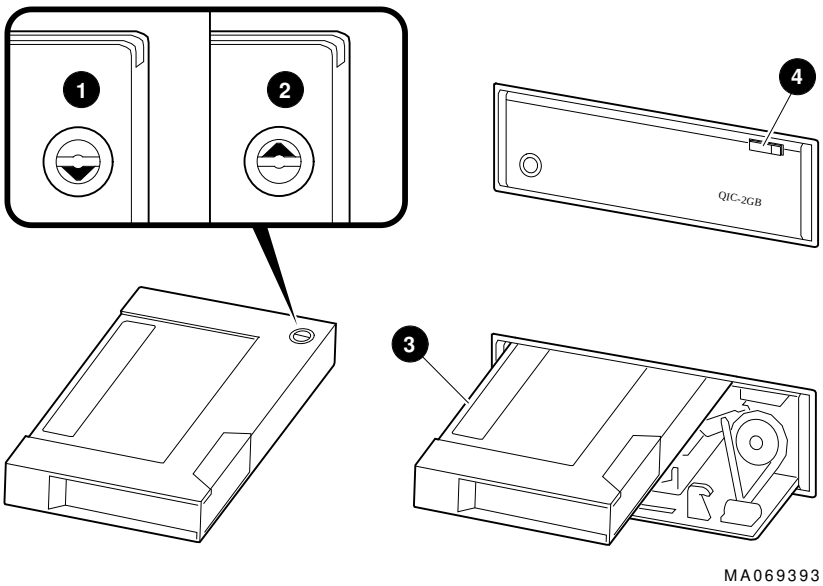

2

Hardware Components

In This Chapter

This chapter covers the following information:

- Operator Control Panel
- System Front
- System Rear
- System Door and Cover
- System Module Locations
- Accessories

Operator Control Panel (OCP)

The operator control panel, shown in Figure 2–1, is located on the front of the system. It contains a diagnostic display and buttons that let you power, halt, and reset the system.

Figure 2–1 Operator Control Panel

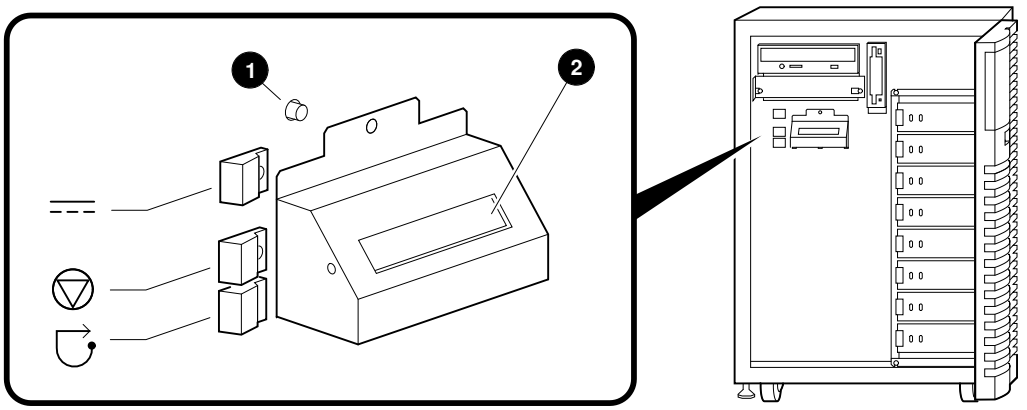

Power-Up Display

Power-Up/Diagnostic Display

The power-up/diagnostic display ❷ displays system status messages during power-up and diagnostics. Use the display to check the results of system self-tests. A potentiometer ❶ allows you to adjust the contrast on the display.

For information about interpreting specific messages, refer to ‘‘Interpreting the Operator Control Panel Power-Up Display’’ in Chapter 4.

DC On/Off Button

⎓ DC On/Off

The DC On/Off button controls the flow of DC power to the system. Use the DC On/Off button to power the system up or down. The DC On/Off light, located on the DC On/Off button, is lit whenever DC power is present.

Halt Button

Halt

The Halt button interrupts an operating system session if you are running DEC OSF/1 or OpenVMS. The Halt light, located on the Halt button, comes on briefly during the system self-tests. Thereafter, the Halt light comes on and remains lit whenever DC power is present and the Halt button is in the ''in'' position.

Before Power-Up: Pressing the Halt button to the ''in'' position before you power up the system boots the SRM console and prevents the operating system from booting.

- To boot the DEC OSF/1 or OpenVMS operating system, the Halt button must be in the ''out'' position.
- To boot the Microsoft Windows NT operating system, the Halt button must be in the ''out'' position and you must enter the `arc` command at the SRM console to invoke the ARC console and access the Boot menu.

Invoking Console Mode: Pressing the Halt button during a DEC OSF/1 or OpenVMS operating system session invokes the SRM console. Pressing the Halt button during a Microsoft Windows NT session has no effect.

Caution

Pressing the Halt button interrupts your DEC OSF/1 or OpenVMS operating system session. Before pressing the Halt button, shut down your operating system according to the operating system shutdown procedure described in your operating system documentation.

Returning to Operating System Mode: To return to operating system mode from console mode, press the Halt button to the ‘‘out’’ position and reboot the operating system.

Note

If you unintentionally press the Halt button, but enter few or no console commands, you may be able to resume your operating system session by entering the `continue` command.

Reset Button

Reset

Pressing the Reset button resets the system. The system stops all current processes, initializes, and performs startup self-tests. Press the Reset button to reset the system if it hangs or to initialize the system if you have changed system settings.

Caution

Pressing the Reset button stops all system processes. Do not press Reset while the operating system is running unless your system is hung and you have exhausted all other ways of terminating the process.

System Front

Front Components

Front components are shown in Figure 2–2 and identified in the numbered callouts.

❶ Operator control panel

❷ Removable-media drive area

❸ Diskette drive

❹ StorageWorks shelf

❺ Removable-media drive access door

❻ Key lock

❼ Leveler feet

Figure 2–2 System Front

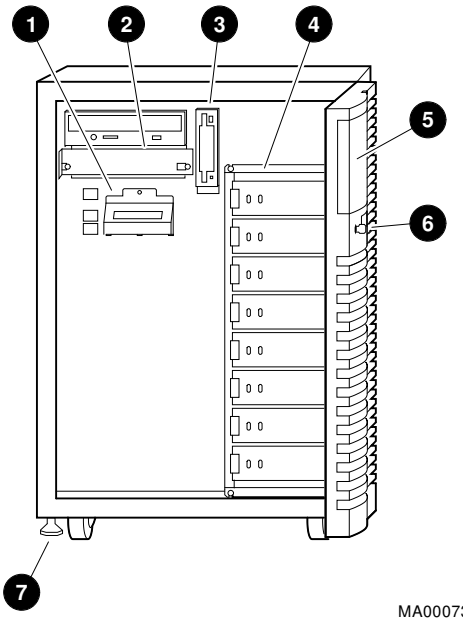

System Rear

Rear Components

Rear components are shown in Figure 2–3 and identified in the numbered callouts.

Figure 2–3 System Rear

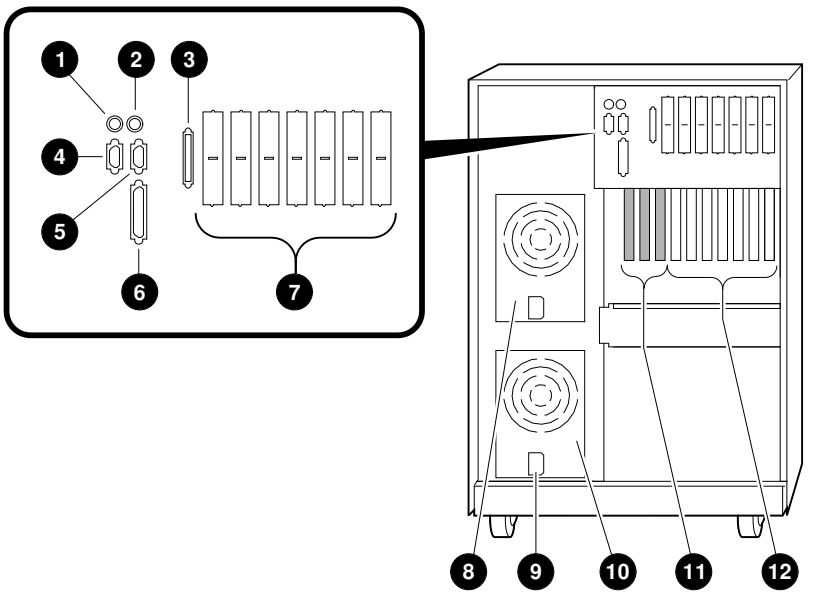

System Rear

❶ Mouse port

❷ Keyboard port

❸ SCSI-2 expansion port

❹ Serial port (COM2)

❺ Serial port (COM1)

❻ Parallel port

❼ SCSI ports or other bulkhead expansion

Warning

The bulkhead expansion contains removable ‘‘knockouts.’’ When you remove a knockout, avoid touching the sharp edge that remains until you install an option bulkhead plate or a connector.

❽ Optional power supply

❾ AC power inlet

❿ Primary power supply

⓫ PCI module bulkheads

⓬ EISA module bulkheads

System Door and Cover

To gain access to system components, remove the system door and then remove the system cover.

Door Removal

Remove the system door as shown in Figure 2–4.

Figure 2–4 Door Removal

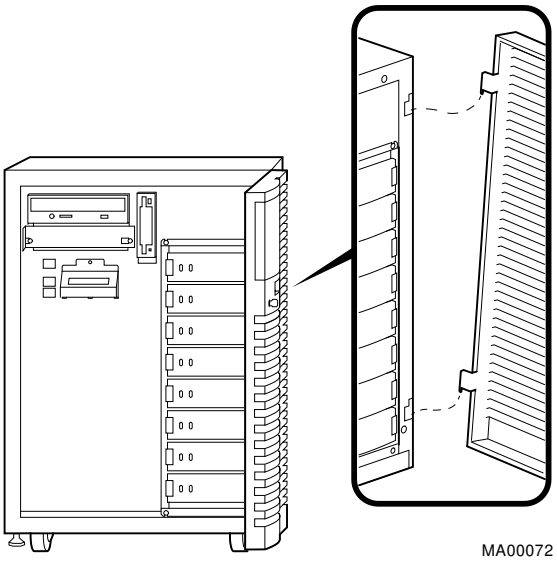

Cover Removal

To remove the system cover, first remove the system door. Then remove the four screws that secure the cover and slide the cover off, as shown in Figure 2–5.

Caution

Do not remove the cover when the system is running. If you do, the system will power down and you may lose data.

Before removing the system cover:

1. Perform an orderly shutdown of the operating system.
2. Turn off DC power by pressing the DC On/Off button to the (O) position.
3. Unplug the AC power cord for each power supply.

System Door and Cover

Figure 2–5 Cover Removal

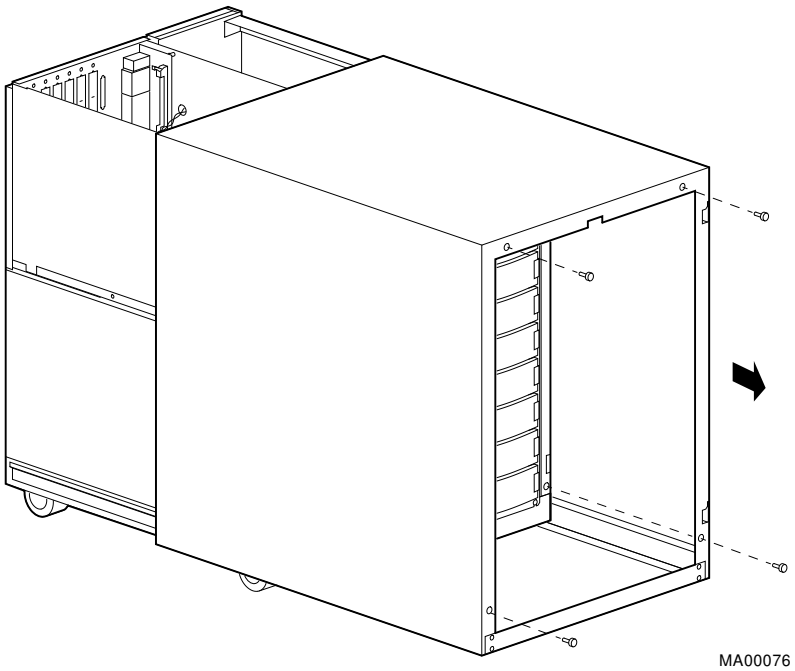

System Module Locations

Card Cages

The system has two modular card cages:

- The lower card cage holds the system backplane, which supports:
  - — Up to two CPU modules
  - — Up to two memory modules
  - — An expansion I/O module, which occupies a memory slot and supports two 32-bit or 64-bit PCI options
- The upper card cage holds the I/O backplane, which supports:
  - — Up to three PCI slots
  - — Up to seven EISA slots

Accessing the Card Cages

To access the card cages, remove the system door and cover as described previously.

Caution

Do not remove the cover when the system is running. If you do, the system will power down and you may lose data.

Before removing the system cover:

1. Perform an orderly shutdown of the operating system.
2. Turn off DC power by pressing the DC On/Off button to the (O) position.
3. Unplug the AC power cord for each power supply.

The locations of the system modules and slots are shown in Figure 2–6 and identified in the numbered callouts.

Figure 2–6 System Module Locations

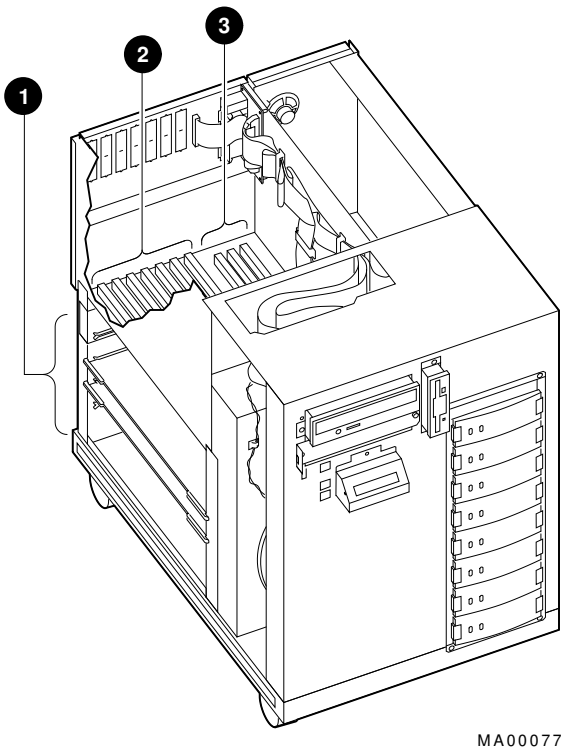

❶ System bus slots

❷ EISA slots

❸ PCI slots

Accessories

Accessories

Your system shipment includes a number of accessories. The contents of the accessories box vary, depending on what you ordered. The accessories box contains some combination of the items shown in Figure 2–7 and described below.

❶ System keys.

❷ Optional MMJ serial port connector (H8571-J)—Attaches DEC423 DECconnect cables (to connect VTxxx terminal or equivalent).

❸ External SCSI terminator—Terminates the SCSI bus at the rear of the system.

❹ Internal SCSI terminator—Terminates the SCSI bus internally.

❺ Mouse—Provides ‘‘point-and-click’’ navigation on VGA terminals and other graphics terminals.

❻ Primary power cord—Connects AC power to the power supply.

❼ Optional second power cord—Connects AC power to a second power supply, if you ordered one.

❽ ECU diskette(s)—Runs the EISA Configuration Utility (ECU). The system shipment includes two ECU diskettes: one for configuring DEC OSF/1 and OpenVMS and one for configuring Microsoft Windows NT.

❾ Optional CD–ROM caddy—Holds a compact disc to be loaded into the CD–ROM drive.

❿ Documentation—Describes system operation, options, and related information.

Figure 2–7 Accessories

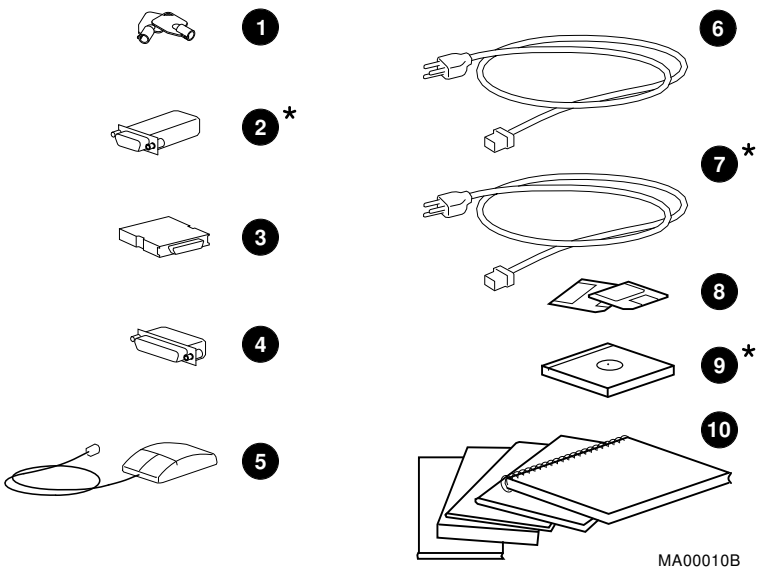

Note

Items marked with an asterisk are optional. They come in the accessories kit if you ordered them.

3

Options and Upgrades

In this Chapter

This chapter covers the following information:

- Upgrade Overview
- Verifying System Configuration
- Supported Options
- Configuring System Options
  - — System bus
  - — EISA bus
  - — ISA bus
  - — PCI bus
  - — SCSI buses
- Power Supply Configurations

Upgrade Overview

Planning Your Upgrade

Plan an upgrade by performing the following tasks:

1. **Create an accurate list of the modules and devices in your current configuration.**

   Refer to your operating system documentation to learn how to view configuration information by using an operating system command.

   You can also view configuration information in console mode. Refer to ''Invoking Console Mode'' in Chapter 1. Once you are in console mode, find configuration information as follows:

   - If you are running DEC OSF/1 or OpenVMS, generate a list of your system's modules and devices by entering the `show config` command at the `P00>>>` console prompt. Refer to ''Verifying System Configuration '' in this chapter for more information.
   - If you are running Microsoft Windows NT, obtain a list of your system's modules and devices by accessing the `Hardware configuration display` menu item. Refer to ''Verifying System Configuration '' in this chapter for more information.

2. **Decide how you wish to change your system.**

   You can obtain a current description of supported options from the *Digital Systems and Options Catalog*.

3. **Determine whether you can install the new option yourself, or whether you need to contact a Digital service representative or other qualified service person.**

   Note

   Removable-media devices should be installed only by a qualified service person.

4. **Determine whether the upgrade will require you to add a second power supply to your system.**

   If you add a second CPU, you must add a second power supply. Refer to the section ‘‘Power Supply Configurations ’’ in this chapter.

5. **Order the options and, if necessary, a second power supply.**

6. **Install and configure the options.**

   - To install the option, refer to the documentation shipped with the option.
   - To configure the option, refer to the appropriate section in this chapter.

Adding Third-Party Devices

Third-party devices are devices purchased from vendors other than Digital.

Before attempting to connect third-party devices or install third-party devices inside your system unit, check with the third-party vendor to ensure that your system and operating system support the device.

For information about installing supported third-party devices inside the system unit, refer to the documentation for the device. All the necessary bracketry for supported devices is supplied with your system.

To connect external third-party SCSI devices to the system, the mass storage bus must be extended. For information about extending the SCSI mass storage bus, refer to the section ‘‘SCSI Buses ’’ later in this chapter.

Supported Options

Supported Options

The AlphaServer 2000 system provides support for a number of bus options. You can obtain a current list of supported options from several sources. The list is updated periodically as new options are added. Consult the following sections for the most convenient way for you to obtain the options list.

Access from the Internet

If you are an Internet participant, you can obtain the latest version of the supported options list as follows:

Access the list from the Digital FTP archive:

```
ftp.gatekeeper.dec.com /pub/Digital/info/misc/2100-options.txt
```

Access the list from the Digital World-Wide Web server:

```
http://www.digital.com/info/misc/2100-options.abs.html
```

Access from CompuServe

CompuServe subscribers can access the list of supported options from the DEC4WNT forum, Library 4, Hardware Support. The file name is OPTS21.TXT.

Digital Systems and Options Catalog

You can obtain information about hardware configurations for the AlphaServer 2000 from the *Digital Systems and Options Catalog*. The catalog is regularly published to assist customers in ordering and configuring systems and hardware options. Each printing of the catalog presents all of the products that are announced, actively marketed, and available for ordering. If necessary, past editions should be retained for reference.

- Call 1-800-DIGITAL (U.S.A. and Canada) or your authorized Digital distributor to talk to a consultant about your configuration.
- Access printable PostScript files of any section of the catalog from the Digital FTP archive on the Internet:

```
ftp gatekeeper.dec.com
cd /pub/Digital/info/SOC
```

Verifying System Configuration

Before You Begin

Several SRM console commands and ARC menu options allow you to examine system configuration and environment variable settings.

To use these commands or menu options, invoke console mode. For information about invoking console mode, refer to ''Invoking Console Mode'' in Chapter 1.

Firmware Menu Options for Microsoft Windows NT

The following ARC menu options are used to verify system configuration on systems running the Microsoft Windows NT operating system.

- The `Display hardware configuration` item on the Supplementary menu displays the ARC boot device names for devices installed in the system.
- The `Set default environment variables` item on the Setup menu allows you to select values for ARC firmware environment variables.

The next sections describe these menu options.

Viewing ARC Hardware Display

To view the hardware configuration on systems running the Microsoft Windows NT operating system, choose the `Display hardware configuration` menu item from the Supplementary menu and press Enter.

There are several parts to the hardware display:

- The first screen displays the boot devices.
- The second screen displays processor information, the amount of memory installed, and the type of video card installed.
- The third and fourth screens display information about the adapters installed in the system's EISA and PCI slots, respectively.

Example 3–1 shows a sample hardware configuration display.

Note

The hardware configuration display does not list tape drives or network devices.

Example 3–1 Sample Hardware Configuration Display

```
                                        Wednesday, 8-31-1994  10:51:32 AM
Devices detected and supported by the firmware:
     ❶                          ❷              ❸
   eisa(0)video(0)monitor(0)
   multi(0)key(0)keyboard(0)
   eisa(0)disk(0)fdisk(0)       (Removable)
   multi(0)serial(0)
   multi(0)serial(1)
   scsi(0)disk(0)rdisk(0)       (1 Partition)   DEC  RZ26L  (C)DEC440C
   scsi(0)cdrom(5)fdisk(0)      (Removable)     DEC  RRD43  (C)DEC 0064
Press any key to continue...
                                        Wednesday, 8-31-1994  10:51:32 AM
Alpha AXP Processor and System Information:
  Processor ID          21064
  Processor Revision    3
  System Revision       0
  Processor Speed       190.11 Mhz
  Physical Memory       128 MB

Video Option detected:
  BIOS controlled video card
 Press any key to continue...
                                        Wednesday, 8-31-1994  10:51:32 AM
EISA slot information:
```

(continued on next page)

Example 3–1 (Cont.) Sample Hardware Configuration Display

```
  Slot    Device          Identifier
    0      Other            DEC2A01
    1       Disk            ADP0001
    2    Network            DEC4220
    5    Network            DEC3002
    6    Network            DEC4250
    7    Display            CPQ3011
    0       Disk             FLOPPY

 Press any key to continue...
                                          Wednesday, 8-31-1994  10:51:32 AM

PCI slot information:

  Bus  Virtual Slot  Function  Vendor  Device  Revision  Device type
   0         1          0       1000       1       1     SCSI
   0         2          0       8086     482       3     EISA bridge
   0         7          0       1011       2      23     Ethernet
   1         0          0       1011       2      21     Ethernet
   1         1          0       1000       1       2     SCSI
   1         2          0       1077    1020       1     SCSI
   1         3          0       1077    1020       1     SCSI
   2         0          0       1011       2      23     Ethernet
   2         1          0       1011       2      23     Ethernet
   2         2          0       1011       2      23     Ethernet
   2         3          0       1011       2      23     Ethernet

 Press any key to continue...
```

❶ Device—Indicates the type of device, for example, EISA or SCSI.

❷ Configuration—Indicates how the device is configured, the number of partitions, and whether the device is a removable device.

❸ Identifier string—Indicates the device manufacturer, model number, and other identification.

Table 3–1 explains the meaning of each device name.

Table 3–1 Device Names

Name	Description
multi(0)key(0)keyboard(0) multi(0)serial(0) multi(0)serial(1)	The multi( ) devices are located on the system module. These devices include the keyboard port and the serial line ports.
eisa(0)video(0)monitor(0) eisa(0)disk(0)fdisk(0)	The eisa( ) devices are provided by devices on the EISA bus. These devices include the monitor and the floppy drive.
scsi(0)disk(0)rdisk(0) scsi(0)cdrom(5)fdisk(0)	The scsi( ) devices are SCSI disk or CD–ROM devices. These examples represent installed SCSI devices. The disk drive is set to SCSI ID 0, and the CD–ROM drive is set to SCSI ID 5. The devices have logical unit numbers of 0.

Viewing ARC Environment Variables

To view the default ARC environment variables, select the `Set default environment variables` item from the Setup menu. You will see a display similar to the following:

Example 3–2 Creating a User-Defined Environment Variable

```
Use Arrow keys to select a variable, ESC to exit:

   Name:
   Value:

Environment variables:
    CONSOLEIN=multi()key()keyboard()console()
    CONSOLEOUT=eisa()video()monitor()console()
    FWSEARCHPATH=scsi()disk(0)rdisk()partition(1)
    TIMEZONE=PST8PDT
    A:=eisa()disk()fdisk()
    FLOPPY2=N
    FLOPPY=1
    AUTOLOAD=YES
    COUNTDOWN=10
    KEYBOARDTYPE=0
    DISABLEPCIPARITYCHECKING=FALSE
```

ARC Environment Variables

Table 3–2 explains the default ARC firmware environment variables.

Table 3–2 ARC Firmware Environment Variables

Variable	Description
CONSOLEIN	The console input device. The default value is multi( )key( )keyboard( )console( ).
CONSOLEOUT	The console output device. The default value is eisa( )video( )monitor( )console( ).
FWSEARCHPATH	The search path used by the ARC firmware and other programs to locate particular files. The default value is the same as the SYSTEMPARTITION environment variable value.
TIMEZONE	The time zone in which the system is located. This variable accepts ISO/IEC9945-1 (POSIX) standard values.
A:	The default diskette drive. The default value is eisa( )disk( )fdisk( ).
FLOPPY	The capacity of the default diskette drive, either 1 (1.2 MB), 2 (1.44 MB), or 3 (2.88 MB).
FLOPPY2	The capacity of an optional second diskette drive, either N (not installed), 1, 2, or 3.
AUTOLOAD	The default startup action, either YES (boot) or NO or undefined (remain in ARC firmware).
COUNTDOWN	The default time limit in seconds before the system boots automatically when AUTOLOAD is set to yes. The default value is 10.
KEYBOARDTYPE	The keyboard language. The default is U.S. (English).
DISABLEPCIPARITY-CHECKING	Disables parity checking on the PCI bus in order to prevent machine check errors that can occur if the PCI device has not properly set the parity on the bus. Also allows peripheral devices that do not fully conform to the PCI specification to be used without generating parity errors. The default value is FALSE—PCI parity checking is enabled.

For More Information

For a more complete listing of the options that are recognized by your Microsoft Windows NT system, you may want to enter the SRM commands described in the next section. To enter SRM commands, you must switch from the ARC to the SRM console. For information about switching to the SRM console, see ''Switching from ARC to SRM'' in Chapter 1. Switch back to the ARC console before booting the Microsoft Windows NT operating system.

Firmware Console Commands for DEC OSF/1 and OpenVMS

The following SRM console commands are used to verify system configuration on systems running either the DEC OSF/1 or OpenVMS operating system.

- `show config`—Displays the buses on the system and the devices found on those buses.
- `show device`—Displays the devices and controllers in the system.
- `show memory`—Displays main memory configuration.
- `set` and `show`—Set and display environment variable settings.

show config

The `show config` command displays all devices found on the system bus, PCI bus, and EISA bus. You can use the information in the display to identify target devices for commands such as `boot` and `test`, as well as to verify that the system sees all the devices that are installed.

The configuration display includes the following:

- Core system status:

  CPU, memory, I/O backplane are shown with the results of power-up tests: P (pass) or F (fail)

- Hose 0, 32-bit PCI:
  - Slot 1 = SCSI controller on I/O backplane, along with storage drives on the bus.
  - Slot 2 = EISA to PCI bridge chip
  - Slots 3–5 = Reserved
  - Slots 6–8 = Correspond to PCI card cage slots: PCI0, PCI1, and PCI2. In the case of storage controllers, the devices off the controller are also displayed.
- Hose 1, EISA:

  Slot numbers correspond to EISA card cage slots (1–7). In the case of storage controllers, the devices off the controller are also displayed.

- Hose 2, PCI:

  Reserved for future expansion.

For more information on device names, refer to the next section, ‘‘show device.’’

Synopsis:

show config

Examples:

```
P00>>> show config
                        Digital Equipment Corporation
                            Alpha AXP (tm) Server

RM Console V3.6-57  VMS PALcode X5.48-33, OSF PALcode X1.35-23

Component        Status        Module ID
CPU 0               P          B2020-AA DECchip (tm) 21064-3
CPU 1               P          B2020-AA DECchip (tm) 21064-3
Memory 0            P          B2023-AA  128 MB
Memory 1            P          B2023-AA   64 MB
I/O                            B2111-AA
                               dva0.0.0.0.1           RX26
Hose 0, PCI
slot 1  NCR 53C810             pka0.7.0.1.0           SCSI Bus ID 7
                               dka0.0.0.1.0           RZ26L
                               dka500.5.0.1.0         RRD43
slot 2  Intel 82375EB

Hose 1, EISA
slot 1  ADP0001                pkb0.7.0.1.1           SCSI Bus ID 7
                               dkb0.0.0.1.1           RZ28
                               dkb100.1.0.1.1         RZ28
slot 2  DEC4220                era0.0.0.2.1           08-00-2B-39-02-15
slot 7  CPQ3011

Hose 2, PCI
```

show device

The `show device` command displays the devices and controllers in the system. The device name convention is shown in Figure 3–1.

Figure 3–1 Device Name Convention

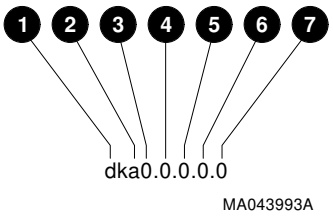

❶ Driver ID

Two-letter port or class driver designator
DR–RAID set device
DV–Diskette drive
ER–Ethernet port (EISA)
EW–Ethernet port (PCI)
PK–SCSI port, DK–SCSI disk, MK–SCSI tape
PU–DSSI port, DU–DSSI disk, MU–DSSI tape

❷ Adapter ID: One-letter adapter designator (A,B,C . . .)

❸ Device Unit Number: Unique device unit number. SCSI unit numbers are forced to 100 x Node ID.

❹ Bus Node Number: Bus Node ID

❺ Channel Number: Used for multi-channel devices.

❻ Slot Number:

- For EISA options—Correspond to EISA card cage slot numbers (1–*).
- For PCI options—Slot 0 = Reserved
  - — Slot 1 = SCSI controller on I/O backplane
  - — Slot 2 = EISA to PCI bridge chip
  - — Slots 3–5 = Reserved
  - — Slots 6–8 = Correspond to PCI card cage slots: PCI0, PCI1, and PCI2.

❼ Hose Number: 0 PCI_0 (32-bit PCI); 1 EISA; 2 PCI_1

Synopsis:

show device [*device_name*]

Arguments:

[*device_name*]	The device name or device abbreviation. When abbreviations or wildcards are used, all devices that match the type are displayed.

Example:

```
P00>>> show device
   ❶                    ❷        ❸                    ❹  ❺
dka0.0.0.1.0             DKA0                       RZ26L  440C
dka500.5.0.1.0           DKA500                     RRD43  0064
dkb0.0.0.1.1             DKB0                        RZ28  435E
dkb100.1.0.1.1           DKB100                      RZ28  435E
dva0.0.0.0.1             DVA0                        RX26
era0.0.0.2.1             ERA0           08-00-2B-39-02-15
pka0.7.0.1.0             PKA0               SCSI Bus ID 7
pkb0.7.0.1.1             PKB0               SCSI Bus ID 7  G.2

P00>>>
```

❶ Console device name

❷ Operating system device name:

- For an allocation class of zero: NODENAME$DIA*u*

  NODENAME is a unique node name and *u* is the unit number. For example, R7BUCC$DIA0.

- For a nonzero allocation class:

  $ALLCLASS$DIA*u*

  ALLCLASS is the allocation class for the system and devices, and *u* is a unique unit number. For example, 1DIA0.

❸ Node name (alphanumeric, up to 6 characters)

❹ Device type

❺ Firmware version (if known)

show memory

The `show memory` command displays information for each memory module in the system.

Synopsis:

`show memory`

Examples:

```
P00>>> show memory
  ❶      ❷       ❸          ❹          ❺          ❻
Module   Size    Base Addr   Intlv Mode  Intlv Unit  Status
------   -----   ---------   ----------  ----------  ------
  0      128MB   00000000      1-Way         0       Passed
Total Bad Pages 0 ❼
P00>>>
```

❶ Module slot number

❷ Size of memory module

❸ Base or starting address of memory module

❹ Interleave mode—number of modules interleaved (1 or 2-way interleaving)

❺ Interleave unit number

❻ Status (passed, failed, or not configured)

❼ Number of bad pages in memory (8 KB/page)

set and show

The `set` command sets or modifies the value of an environment variable. The `show` command displays the results of the `set` command. Environment variables are typically set when you are configuring a system. They are used to pass configuration information between the console firmware and operating system.

Synopsis:

set [-default] [-integer] -[string] *envar value*

show *envar*

Arguments:

envar	The name of the environment variable to be modified.
value	The value that is assigned to the environment variable. This may be an ASCII string.

Options:

-default	Restores variable to its default value.
-integer	Creates variable as an integer.
-string	Creates variable as a string (default).

Examples:

```
P00>>> set bootdef_dev dka0
P00>>> show bootdef_dev
dka0
P00>>> show auto_action
boot
P00>>> set boot_osflags 0,1
P00>>>
```

For more information about the `set` and `show` commands, including the environment variables that you can set, refer to the *AlphaServer 2000/2100 Firmware Reference Guide*.

System Bus Options

The system bus interconnects the CPUs, memory modules, and the optional PCI expansion I/O module. It is the hardware structure through which data processed by the microprocessor is transferred throughout the system.

Figure 3–2 shows the location of the system bus and system bus options. To access the system bus options, remove the system cover. Refer to Figure 2–5 and the accompanying text before removing the cover. Be sure to reattach the four cover screws before attempting to power up the system again.

Caution

Do not remove the cover when the system is running. If you do, the system will power down and you may lose data.

Figure 3–2 System Bus Option Locations

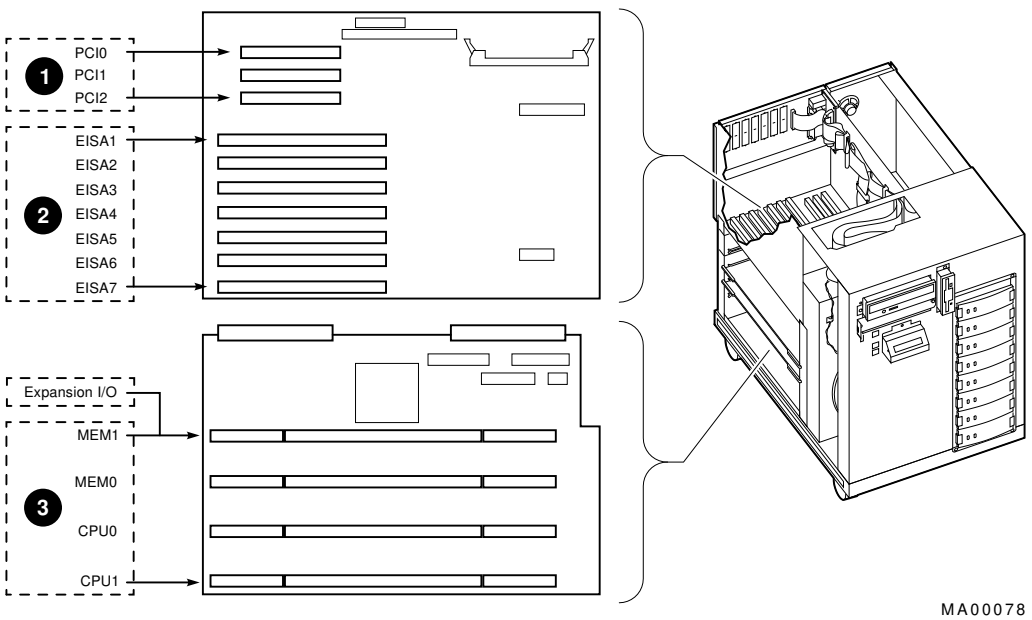

❶ PCI Bus

❷ EISA Bus

❸ System Bus

CPU Modules

The server can support up to two CPUs in a symmetric multiprocessing (SMP) configuration. Figure 3–3 shows the supported system bus configurations when the system is configured with one CPU ❶ or with two CPUs ❷.

- All systems must have a CPU module installed in system bus slot 2 (CPU 0).
- Systems with two CPUs require a second power supply.

Warning

Before installing a CPU module, turn off all power to the system (both AC and DC). Refer to ‘‘Powering Down the System’’ in Chapter 1 for information about turning off AC and DC power.

Figure 3–3 System Bus Configurations with One CPU and Two CPUs

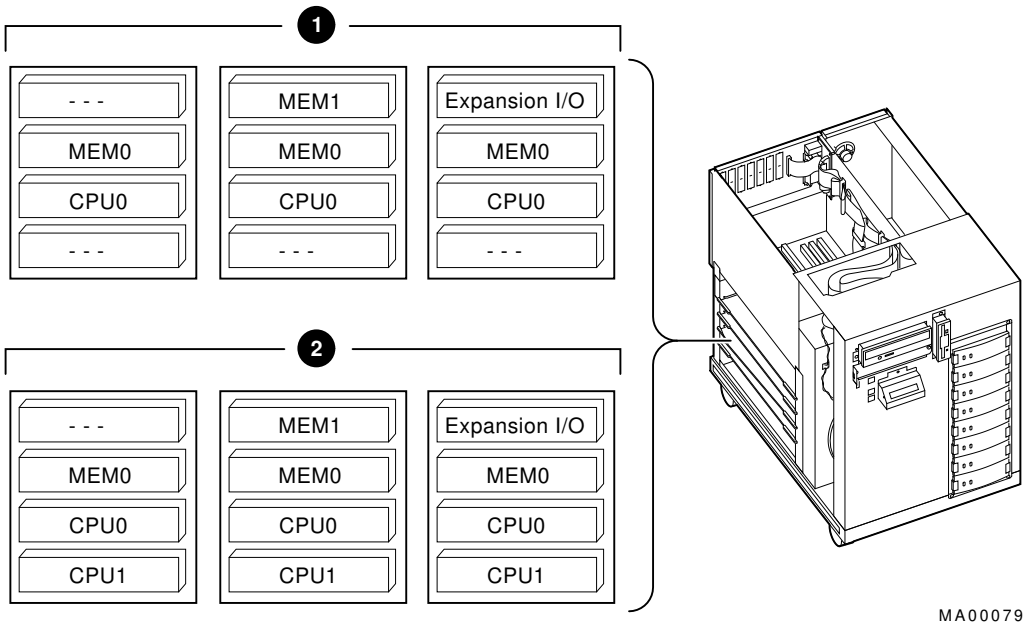

Warning: System bus modules have parts that operate at high temperatures. Wait two minutes after powering off the system before handling these modules.

Memory Modules

The standard AlphaServer 2000 system comes with 64 megabtyes of installed memory. It can be configured with a maximum of 640 megabytes using two memory modules: one fully populated module with 4-megabyte SIMMs (single in-line memory modules) and one fully populated module with 16-megabyte SIMMs.

SIMM Characteristics

You can install up to four banks of memory per module, using industry-standard JEDEC, 72-pin SIMMs in either of two types:

- 1-megabyte x 36-bit, 70 nanoseconds or faster
- 4-megabyte x 36-bit, 70 nanoseconds or faster

Caution

The maximum height SIMM that will fit in the AlphaServer 2000 system is 1.1 inches. Be sure to make a note of this requirement before you purchase SIMMs for your system.

Memory Upgrades

To increase your system memory, you can order memory add-on packages and additional memory modules. The memory modules and add-on packages available from Digital are as follows:

MS452-AA	32-megabyte memory module (SIMM carrier with eight 4-megabyte SIMMs)
MS452-BA	128-megabyte memory module (SIMM carrier with eight 16-megabyte SIMMs)
MS452-UA	32-megabtye memory add-on package (eight 4-megabtye SIMMs for MS452-AA)
MS452-UB	128-megabyte memory add-on package (eight 16-megabyte SIMMs for MS452-BA)

Ordering Additional Memory

Table 3–3 shows how to order additional memory. The first section of the table shows a typical upgrade path in small increments to a maximum memory of 256 megabytes, using the MS452-AA memory module and the MS452-UA add-on package. The second section shows a typical upgrade path in large increments to a maximum memory of 640 megabytes, using the MS452-AA and MS452-BA memory modules and the MS452-UA and MS452-UB add-on packages. Call 1-800-DIGITAL (U.S.A. and Canada) or your authorized Digital distributor to order additional memory.

For example, to upgrade to 256 megabytes in small increments, order five MS452-UA add-on packages, plus one MS452-AA memory module. To upgrade to 256 megabtyes in large increments, order two MS452-UA add-on packages, plus one MS452-BA memory module.

Table 3–3 Memory Upgrade Paths

	Order Quantities Shown	
Total Memory Desired (Max.256 MB)	**MS452-UA**	**MS452-AA**
96 MB	1	0
128 MB	2	0
160 MB	2	1
192 MB	3	1
256 MB	5	1

	Order Quantities Shown		
Total Memory Desired (Max. 640 MB)	**MS452-UA**	**MS452-BA**	**MS452-UB**
96 MB	1	0	0
128 MB	2	0	0
256 MB	2	1	0
384 MB	2	1	1
640 MB	2	1	3

Memory Configuration Rules

Observe the following rules when configuring memory on the AlphaSever 2000 system:

- You cannot mix 4-megabyte SIMMs and 16-megabyte SIMMs on an individual module.
- Fill your first memory module to capacity before adding memory to the second module.
- You can fill the second memory module with 1, 2, or 4 banks of SIMMs.
- Maximum memory is 640 megabytes using one fully populated module with 4-megabyte SIMMs and one fully populated module with 16-megabyte SIMMs.

Warning

Before installing a memory module, turn off all power to the system (both AC and DC). Refer to ''Powering Down the System'' in Chapter 1 for information about turning off AC and DC power.

Expansion I/O

If either additional PCI slots or 64-bit I/O performance is required, an expansion I/O module can be added to the system in place of a memory module in slot 1. The expansion I/O module provides two PCI slots, which can be accessed from the rear of the system for external expansion.

Note

Expansion I/O is planned as a future enhancement. Check with your Digital representative for information on availability.

EISA Bus Options

The EISA bus (Extended Industry Standard Architecture bus) is a 32-bit, industry-standard I/O bus. EISA is a superset of the well-established 16-bit ISA bus. EISA was designed to accept newer 32-bit options while still remaining compatible with older 8-bit and 16-bit options.

With a bandwidth of 33 MB/sec, EISA is well suited to medium-performance options, such as modems, asynchronous communication controllers, and other miscellaneous peripherals. Up to seven EISA (or ISA) modules can reside in the EISA bus portion of the card cage. All slots are bus master slots. EISA slots can be filled in any order.

Figure 3–2 shows the location of EISA slots. To access the card cage, remove the system cover. Refer to Figure 2–5 and the accompanying instructions before removing the cover. Be sure to reattach the four cover screws before attempting to power up the system again.

Caution

Do not remove the cover when the system is running. If you do, the system will power down and you may lose data.

For information about installing a specific EISA option, refer to the documentation for that option. For information about configuring an EISA option, refer to the section ‘‘Configuring EISA and ISA Options’’ in this chapter.

Warning

Before installing EISA bus options, turn off all power to the system (both AC and DC). Refer to the section ‘‘Powering Down the System’’ in Chapter 1 for information about turning off AC and DC power.

Warning: For protection against fire, only modules with current-limited outputs should be used.

ISA Bus Options

The ISA bus (Industry Standard Architecture bus) is an industry-standard, 16-bit I/O bus. The EISA bus is a superset of the well-established ISA bus and has been designed to be backward compatible with 16-bit and 8-bit architectures. Therefore, ISA modules can be used in the AlphaServer 2000 system, provided the operating system supports the device and enough system resources are available to configure the device.

Up to seven ISA (or EISA) modules can reside in the EISA bus portion of the card cage. Figure 3–2 shows the location of ISA slots on the card cage on the I/O backplane.

To access the card cage, remove the system cover. Refer to Figure 2–5 and the accompanying text before removing the cover. Be sure to reattach the four cover screws before attempting to power up the system again.

Caution

Do not remove the cover when the system is running. If you do, the system will power down with potential loss of data.

ISA Bus Options

For information about installing a specific option, refer to the documentation for that option. For information about configuring an ISA option, refer to the section ‘‘Configuring EISA and ISA Options’’ in this chapter.

Warning

Before installing ISA bus options, turn off all power to the system (both AC and DC). Refer to ‘‘Powering Down the System’’ in Chapter 1 for information about turning off AC and DC power.

Warning: For protection against fire, only modules with current-limited outputs should be used.

Identifying ISA and EISA Options

By examining the contacts on the option board, you can distinguish between EISA and ISA options (see Figure 3–4):

- ISA boards have one row of gold contacts.
- EISA boards have two interlocking rows of gold contacts.

Figure 3–4 ISA and EISA Boards

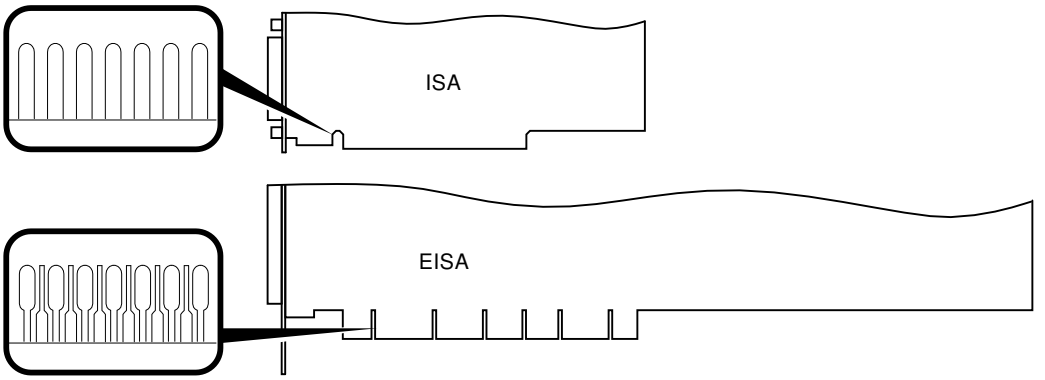

Configuring EISA and ISA Options

EISA Configuration Utility

Whenever you add, remove, or move an EISA or ISA option in your system, you must run a utility called the EISA Configuration Utility (ECU). Each EISA or ISA option has a corresponding configuration (CFG) file, which describes the characteristics and the system resources required for that option. The ECU uses the CFG file to create a conflict-free configuration. The ECU is a menu-based utility that provides online help to guide you through the configuration process. The ECU is run from the ARC menu interface.

System Configuration Diskette

The ECU is supplied on the System Configuration Diskette that was shipped with your system. Make a copy of the System Configuration Diskette and keep the original in a safe place. Use the backup copy when you are configuring the system. The System Configuration Diskette must have the volume label SYSTEMCFG.

Note

The CFG files supplied with the option you want to install may not work on this system if the option is not supported. Before you install an option, check that your system supports the option.

Before You Run the ECU

Before running the ECU:

1. Install EISA boards. (You install ISA boards after you run the ECU.)

   For information about installing a specific option, refer to the documentation for that option.

2. Familiarize yourself with the utility.

   You can find more information about the ECU by reading the ECU online help. To read the online help, start the ECU (refer to ‘‘Starting the ECU.’’) Online help for the ECU is located under Step 1, ‘‘Important EISA Configuration Information.’’

3. Familiarize yourself with the configuration procedure for your system:
   - If you are configuring an EISA bus that contains only EISA options, refer to Table 3–4.
   - If you are configuring an EISA bus that contains both ISA and EISA options, refer to Table 3–5.
4. Locate the ECU diskette for your operating system. Make a copy of the diskette and keep the original in a safe place. Use the backup copy for configuring options.
   - ECU Diskette DECpc AXP (AK-PYCJ*-CA) for Microsoft Windows NT
   - ECU Diskette DECpc AXP (AK-Q2CR*-CA) for DEC OSF/1 and OpenVMS

   The ECU diskette is shipped in the accessories box with your system.

Starting the ECU

Complete the following steps to start the ECU:

1. Invoke the console firmware.
   - **For systems running Microsoft Windows NT**—Shut down the operating system or power up to the console Boot menu.
   - **For systems running DEC OSF/1 or OpenVMS**—Shut down the operating system and press the Halt button or power up with the Halt button set to the ''in'' position. When the console prompt P00>>> is displayed, set the halt button to the ''out'' position.
2. Start the ECU as follows:
   - **For systems running Microsoft Windows NT**—Select the following menus:
     a. From the Boot menu, select `Supplementary menu`.
     b. From the Supplementary menu, select `Set up the system . . . .` Insert the ECU diskette for Windows NT (AK-PYCJ*-CA) into the diskette drive.
     c. From the Setup menu, select `Run EISA configuration utility from floppy.` This boots the ECU program.

- **For systems running DEC OSF/1 or OpenVMS**— Start ECU as follows:

  a. Insert the ECU diskette for DEC OSF/1 or OpenVMS (AK-Q2CR*-CA) into the diskette drive.

  b. Enter the `ecu` command.

     The message `loading ARC firmware` is displayed. Loading the ARC firmware takes approximately 2 minutes. When the firmware has finished loading, the ECU program is booted.

3. Complete the ECU procedure according to the guidelines provided in the following sections.

   - If you are configuring an EISA bus that contains only EISA options, refer to Table 3–4.

Note

If you are configuring only EISA options, do not perform Step 2 of the ECU, `Add or Remove Boards`. (EISA boards are recognized and configured automatically.)

   - If you are configuring an EISA bus that contains both ISA and EISA options, refer to Table 3–5.

4. After you have saved configuration information and exited from the ECU:
   - **Systems running Microsoft Windows NT**—Remove the ECU diskette from the drive and boot the operating system.
   - **Systems running DEC OSF/1 or OpenVMS**—Remove the ECU diskette from the drive. Return to the SRM console firmware as follows:
     a. From the Boot menu, select `Supplementary menu`.
     b. From the Supplementary menu, select `Set up the system . . . .` The Setup menu is then displayed.
     c. From the Setup menu, select `Switch to OpenVMS or OSF console.` This allows you to select your operating system console.
     d. Select your operating system console, then select `Supplementary menu, and save changes . . . .`
     e. When the message `Power-cycle the system to implement the change` is displayed, press the Reset button. (Do not press the DC On/Off button.) Once the console firmware is loaded and device drivers are initialized, you can boot the operating system.
5. Verify that the new options are configured correctly.

Configuring EISA Options

EISA boards are recognized and configured automatically. Table 3–4 summarizes the steps necessary to configure an EISA bus that contains no ISA options. Review the section entitled ''Before You Run the ECU.'' Then run the ECU as described in the section ''Starting the ECU.''

Note

It is not necessary to run Step 2 of the ECU, `Add or Remove Boards.` (EISA boards are recognized and configured automatically.)

Table 3–4 Summary of Procedure for Configuring EISA Bus (EISA Options Only)

Step	Explanation
Install EISA option.	Use the instructions provided with the EISA option.
Power up the system and run ECU.	If the ECU locates the required CFG configuration files, it displays the main menu. The CFG file for the option may reside on a configuration diskette packaged with the option or may be included on the system configuration diskette. **Note** It is not necessary to run Step 2 of the ECU, `Add or Remove Boards.` (EISA boards are recognized and configured automatically.)
View or edit details (optional).	The `View or Edit Details` ECU option is used to change user-selectable settings or to change the resources allocated for these functions (IRQs, DMA channels, I/O ports, and so on). This step is not required when you are using the board's default settings.
Save your configuration.	The `Save and Exit` ECU option saves your configuration information to the system's nonvolatile memory.
Return to the SRM console (DEC OSF/1 and OpenVMS systems only) and restart the system.	Refer to step 4 of the previous section for operating-system-specific instructions.

Configuring EISA/ISA Options

ISA boards are configured manually, whereas EISA boards are configured through the ECU software. Study Table 3–5 for a summary of steps to configure an EISA bus that contains both EISA and ISA options. Review the section entitled ‘‘Before You Run the ECU.’’ Then run the ECU as described in the section ‘‘Starting the ECU.’’

Table 3–5 Summary of Procedure for Configuring EISA Bus with ISA Options

Step	Explanation
Install or move EISA option. Do not install ISA boards.	Use the instructions provided with the EISA option. ISA boards are installed after the configuration process is complete.
Power up the system and run the ECU.	If you have installed an EISA option, the ECU must locate the CFG file for that option. The CFG file for the option may reside on a configuration diskette packaged with the option or may be included on the system configuration diskette.
Add the ISA board to the configuration list.	Use the `Add or Remove Boards` ECU option to add the CFG file for the ISA option and to select an acceptable slot for the option. The CFG file for the option may reside on a configuration diskette packaged with the option or may be included on the system configuration diskette. If you cannot find the CFG file for the ISA option, select the generic CFG file for ISA options from the configuration diskette.
View or edit details (optional).	The `View or Edit Details` ECU option is used to change user-selectable settings or to change the resources allocated for these functions (IRQs, DMA channels, I/O ports, and so on). This step is not required when you are using the board's default settings.
Examine and set required switches to match the displayed settings.	The `Examine Required Switches` ECU option displays the correct switch and jumper settings that you must physically set for each ISA option. Although the ECU cannot detect or change the settings of ISA boards, it uses the information from the previous step to determine the correct switch settings for these options. Physically set the board's jumpers and switches to match the required settings.
Save your configuration.	The `Save and Exit` ECU option saves your configuration information to the system's nonvolatile memory.
Return to the SRM console (DEC OSF/1 and OpenVMS systems only) and turn off the system.	Refer to step 4 of the section ''Starting the ECU'' for information about returning to the SRM console.
Install ISA board and turn on the system.	Use the instructions provided with the ISA option.

PCI Bus Options

For options that require high performance, a Peripheral Component Interconnect (PCI) bus is included in the AlphaServer 2000 system.

PCI is an industry-standard expansion I/O bus that is the preferred bus for high-performance I/O options, such as network interconnects (FDDI, Ethernet, Token Ring), storage interconnects (SCSI, Fast SCSI, IPI), and high-performance video applications. The AlphaServer 2000 system supports 32-bit PCI options.

The PCI bus is shown in Figure 3–2. There are three slots for 32-bit PCI options. A PCI board is shown in Figure 3–5.

Figure 3–5 PCI Board

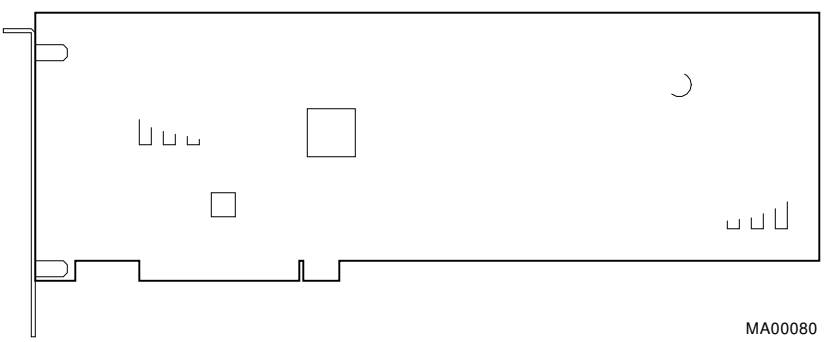

Installing PCI Boards

Install PCI boards according to the instructions supplied with the option. PCI boards require no additional configuration procedures; the system automatically recognizes the boards and assigns the appropriate system resources.

Warning

Before installing a PCI option, turn off all power to the system (both AC and DC). Refer to ‘‘Powering Down the System’’ in Chapter 1 for information about turning off AC and DC power.

Warning: For protection against fire, only modules with current-limited outputs should be used.

SCSI Buses

A SCSI bus expansion port on the rear of the system enables you to extend the bus that runs through the removable-media mass storage compartment outside the system. As a result, you can connect external mass storage devices to the buses inside the system.

A Fast SCSI-2 adapter on the I/O backplane provides a single-ended SCSI bus for the system.

All tabletop or rackmounted SCSI-2 devices are supported via EISA- or PCI-based SCSI adapters. Use the following rules to determine if a device can be used on your system:

- The device must be supported by the operating system. Consult the software product description or hardware vendor.
- No more than seven devices can be on any one SCSI-2 controller, and each must have a unique SCSI ID.
- The entire SCSI bus length, from terminator to terminator, must not exceed 6 meters for single-ended SCSI-2 at 5 MB/sec, or 3 meters for single-ended SCSI-2 at 10 MB/sec.

  For AlphaServer 2000 systems, the internal cabling for the removable media bus is 2.6 meters.

Internal SCSI Bus

The internal SCSI bus supports the internal removable-media devices and can be extended to the internal StorageWorks shelf or to an external expander. The Fast SCSI-2 adapter supports up to seven drives.

One internal StorageWorks shelf is standard with the system. The StorageWorks shelf can support up to eight 3.5-inch storage devices. The StorageWorks shelf can be configured to run as a single bus or a dual bus and is ''wide ready.'' That is, with the proper adapter, faster-performing wide disks can be plugged into the StorageWorks enclosure.

Configuring the Removable Media Bus

Removable-media storage devices should only be installed by a qualified service person.

Warning

Before connecting removable-media SCSI devices to your system, turn off all power to the system (both AC and DC). Refer to ''Powering Down the System'' in Chapter 1 for information about turning off AC and DC power.

The removable-media bus can be configured to extend into the internal StorageWorks shelf or to allow expansion from the connector on the bulkhead at the rear of the enclosure (Figure 3–6):

- When the bus is configured to extend into an internal StorageWorks shelf ❶, the bus must be terminated at the bulkhead connector using the external SCSI terminator (12-37004-04) ❺.

  External expansion from the back of the enclosure is not allowed in this configuration, as it would violate SCSI bus length rules.

- When the bus is not extended into an internal StorageWorks shelf, the internal SCSI terminator (12-41296-01) ❸ is required.

  External expansion from the back of the enclosure is available in this configuration ❷; however, the connecting SCSI bus cannot exceed 3.4 meters in length (5 megabytes /second operation). If the bus is not expanded, be sure the external SCSI terminator (12-37004-04) ❺ is in place.

Figure 3–6 Removable-Media Bus Configurations

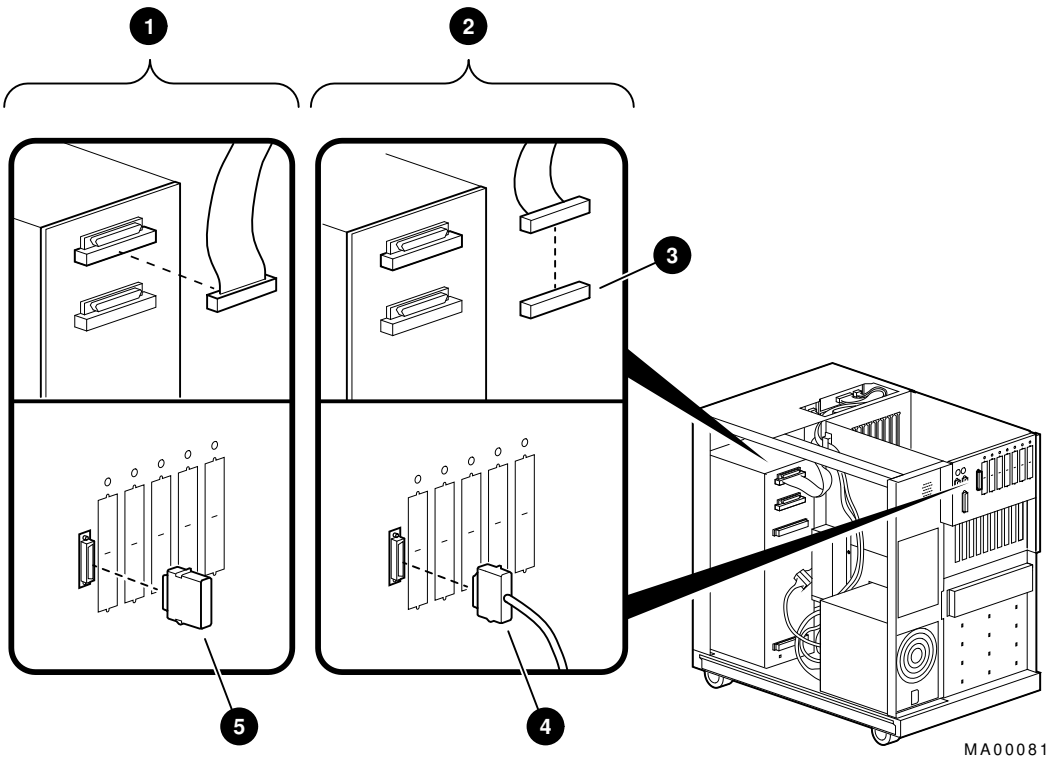

❶ Internal SCSI Expansion

❷ External SCSI Expansion

❸ Internal SCSI Terminator

❹ External SCSI Expansion Cable

❺ External SCSI Terminator

SCSI Bus Node IDs

When connecting devices to a bus, keep in mind that each device on the bus must have a unique bus node ID and that you may need to change a device's default bus node ID in order to make it unique. All removable-media device bus node IDs are set via switches on the device. For information about setting a device's bus node ID, refer to the owner's guide for that device.

To display bus node IDs for devices that are already connected to your system, enter the `show device` command. Refer to ''Verifying System Configuration ,'' earlier in this chapter, for information about interpreting the `show device` command display.

Internal StorageWorks Shelves

The backplane of the internal StorageWorks shelf supplies the drive's SCSI node ID according to the location of the drive within the storage shelf. Each internal StorageWorks shelf can be configured in one of two ways:

- Single bus — Up to seven drives, each with a unique node ID. In this configuration, the bottom slot is not used.
- Dual bus — Up to four pair of drives (node IDs 0–3, top to bottom).

The storage shelf configuration is controlled by the position of the terminator (BA35X-MB) and jumper (BA35X-MC) as shown in Figure 3–7 and the corresponding callouts.

❶ Single Bus Configuration

❷ Dual Bus Configuration

❸ Bus terminator

❹ Bus jumper

❺ 16-bit, wide SCSI bus

❻ 8-bit, wide SCSI bus

Figure 3–7 Internal StorageWorks Configuration

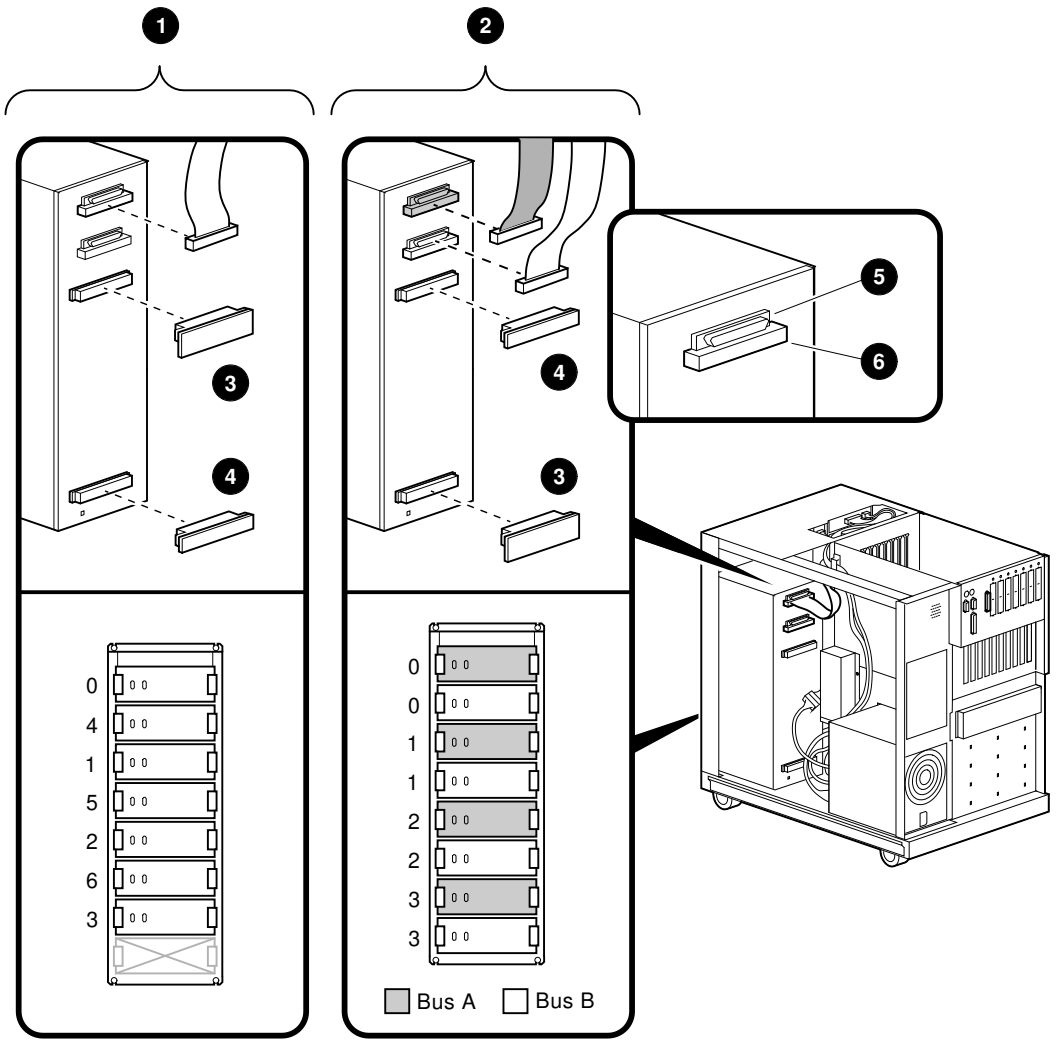

Installing StorageWorks Fixed Disks

If you purchased a StorageWorks RAID Array 200 Subsystem with your computer (which includes the SWXCR-E*x* controller), you can ''hot swap'' drives, that is, you can install or replace drives without first shutting down the operating system or powering down the server hardware.

For more information, see *StorageWorks RAID Array 200 Subsystem Family Installation and Configuration Guide,* EK-SWRA2-IG.

If your StorageWorks drives are not plugged into the RAID subsystem, shut down the operating system before swapping a drive. However, you do not need to power down the server before installing the drive.

Installation Procedure

To install a StorageWorks disk drive:

1. If your StorageWorks drives are plugged into the RAID subsystem, go to step 2. If your drives are not plugged into the RAID subsystem, shut down the operating system before you go to step 2.
2. Remove a blank bezel by pressing the two mounting tabs and pull the bezel out of the shelf.
3. Insert the hard-disk drive into the guide slots and push it in until the tabs lock in place.

Figure 3–8 shows how to install hard-disk drives in a StorageWorks shelf.

Figure 3–8 Installing Hard-Disk Drives

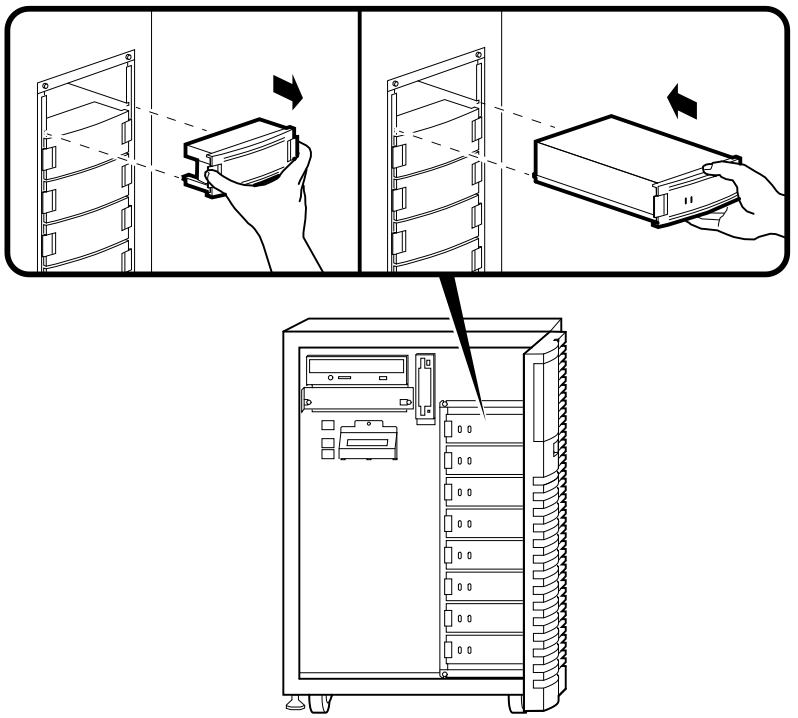

Preferred SWXCR-Ex Cable Routing

The preferred cable routing for AlphaServer 2000 systems with the SWXCR-E*x* controller is shown in Figure 3–9.

Figure 3–9 Preferred SCSI Cable Routing with SWXCR Controller

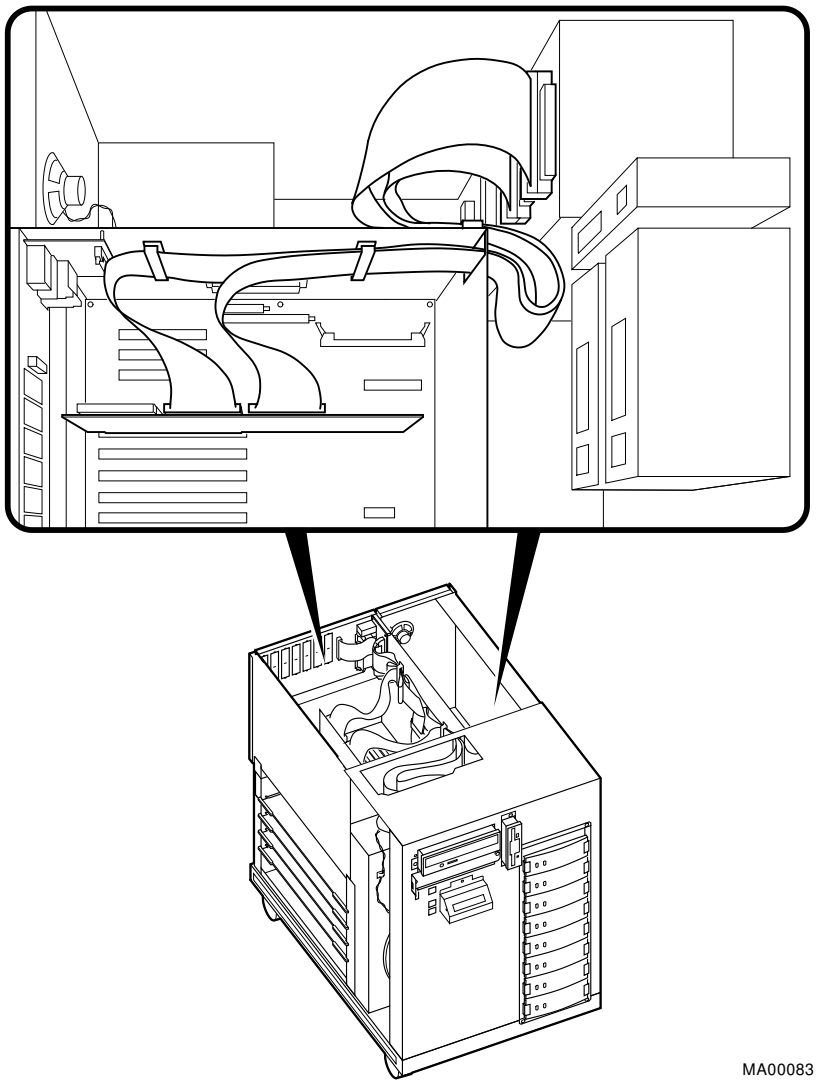

Guidelines for Systems with SWXCR-Ex Controller

If you purchased a StorageWorks RAID Array 210 Subsystem for your AlphaServer 2000 system, observe the guidelines below when you add, move, or reconfigure RAID devices. The RAID subsystem includes the SWXCR-E*x* EISA backplane RAID controller.

- Run the EISA Configuration Utility (ECU) as described in this chapter to configure all modules on the EISA bus.
- Run the RAID Configuration Utility (RCU) as described in *StorageWorks RAID Array 200 Subsystem Family Installation and Configuration Guide* to set up the disk drives and logical units. The RCU is provided on a diskette with the RAID subsystem kit.
- On OpenVMS systems, RAID drives do not autoconfigure. See the *StorageWorks RAID Array 200 Subsystem Family Software User's Guide for OpenVMS AXP* for instructions on configuring your RAID devices on OpenVMS.

RAID Subsystem Documentation

For information about the RAID subsystem and specific operating systems, consult the documents listed in Table 3–6. These documents are included in your RAID subsystem kit. Refer to the section ''Problems with RAID Devices'' in Chapter 4 for RAID troubleshooting hints related to the AlphaServer 2000 system.

Table 3–6 RAID Subsystem Documentation

Document	Part Number
StorageWorks RAID Array 200 Subsystem Family Installation and Configuration Guide	EK-SWRA2-IG
StorageWorks RAID Array 200 Subsystem Family Software User's Guide for OpenVMS AXP	AA-Q6WVA-TE
StorageWorks RAID Array 200 Subsystem Family Software User's Guide for DEC OSF/1 AXP	AA-Q6TGA-TE
StorageWorks RAID Array 200 Subsystem Family Software User's Guide for Windows NT AXP	AA-Q6SWA-TE

Power Supply Configurations

AlphaServer 2000 systems offer added reliability with redundant power options, as well as uninterruptible power supply (UPS) options. Figure 3–10 shows the system's power supply options.

Figure 3–10 Power Supply Configurations

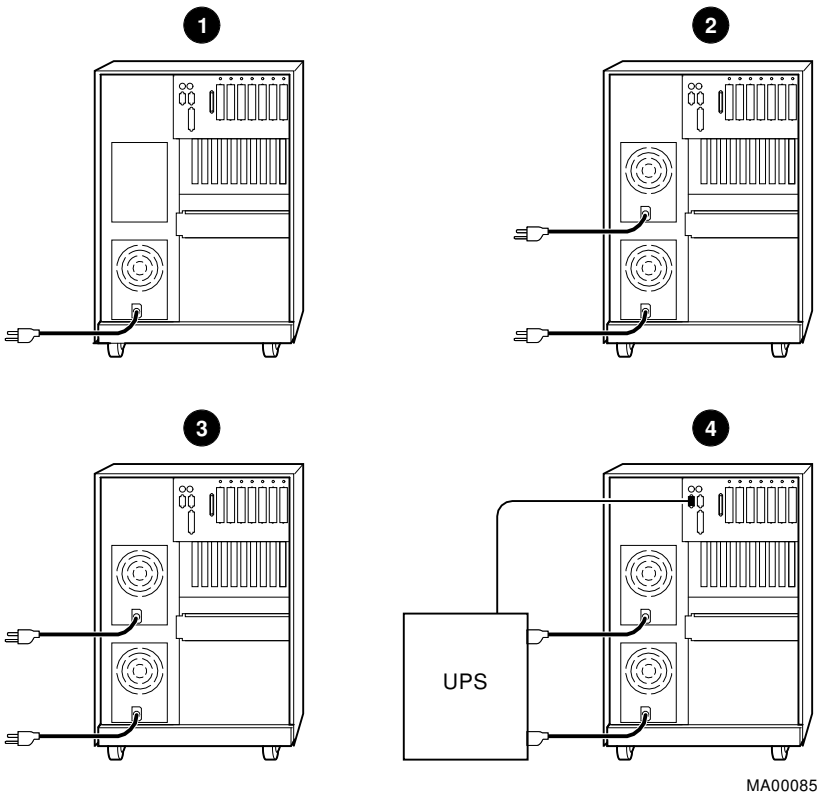

❶ Single—400 watts DC or less

❷ Redundant—400 watts DC or less (J3 installed on I/O backplane)

❸ Full—Up to 725 watts DC

❹ UPS

Power Supply Modes

The power supplies for AlphaServer 2000 systems support three different modes of operation. In addition, UPS options are available.

Power supply modes of operation:

1. Single power supply—Supports systems with:
   - — One CPU
   - — Two memory modules
   - — One diskette drive
   - — Two removable drives
   - — Eight 3.5-inch StorageWorks hard disks
   - — Ten I/O slots
2. Dual power supply (redundant mode)—Provides redundant power (n + 1) for the system described above.

   In redundant mode, the failure of one power supply does not cause the system to shut down. Normal operation continues with no impact on the system.

   The power supply mode jumper (J3) on the I/O backplane module must be installed to activate redundant mode power. Figure 3–11 shows the jumper installed ❶ and the jumper not installed ❷.
3. Dual power supply (full power mode)—Provides full power for systems with two CPUs. If you purchased a system with two CPUs, or plan to upgrade to two CPUs, you need a second power supply.

   If you have two power supplies, the current share cable should be installed between them, as shown in Figure 3–12.

Figure 3–11 I/O Backplane Jumpers

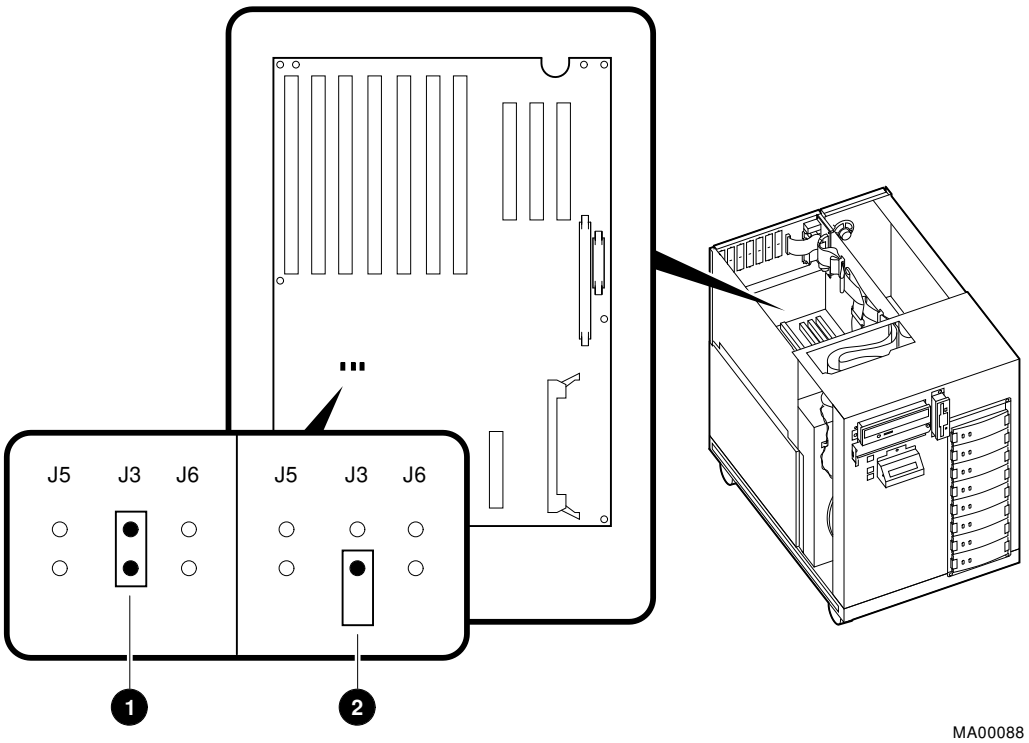

Figure 3–12 Current Share Cable Connection

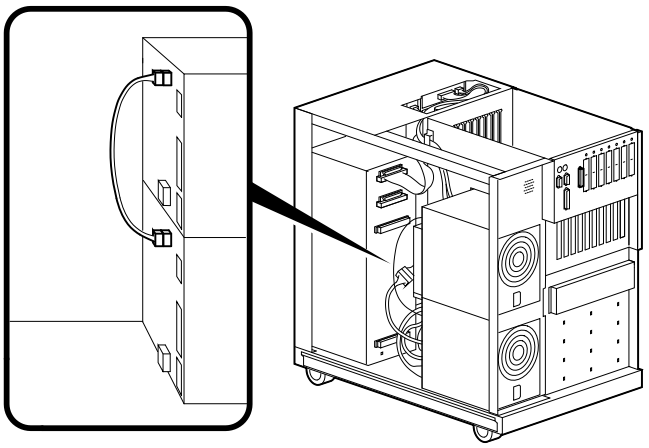

Power Requirements

The single and redundant mode power supply configurations are available to those systems drawing the following power levels:

Note

Total combined power of all outputs per supply cannot exceed 400 watts.

- 36.0 A or less of +3.3 V power
- 52.0 A or less of +5.0 V power
- 11.0 A or less of +12.0 V power
- 0.2 A or less of -12.0 V power
- 0.2 A or less of -5.0 V power
- The combination of 3.3 V power and 5.0 V power cannot exceed 335 watts.

Power Ordering Guidelines

If you add a second CPU to your system, do one of the following:

- Order a second power supply (H7845-AA).
- If you have a dual power supply that is configured in redundant mode, reconfigure it into full power mode.

4

Troubleshooting the System

Introduction

This chapter provides troubleshooting information.

In This Chapter

This chapter covers the following information:

- Before You Begin
- Task Overview
- Determining Type of Problem
- Reporting Problems to Digital Services
- Power Problems
- Problems Getting to Console Mode
- Interpreting the Operator Control Panel Power-Up Display
- Console Reported Problems
- Mass Storage Problems Indicated at Power-Up
- PCI Bus Problems Indicated at Power-Up
- EISA Bus Problems Indicated at Power-Up
- Boot Problems
- Operating System Reported Problems
- Problems with RAID Devices

Before You Begin

Determine Service Provider

Before you begin, be sure you are aware of the service agreement for your system. Your agreement will help you determine how much troubleshooting and repair you should undertake yourself.

- If you plan to maintain the system yourself, use the information in this chapter to help identify and fix the problem.
- If you have a service agreement with Digital, you can contact your Digital service representative for assistance.

Note

If you are a self-maintenance customer, refer to the *AlphaServer 2000/2100/2100 RM/2100 CAB Series Service Guide* for more comprehensive troubleshooting information.

Identifying Problems

Table 4–1 lists ways to identify problems, and indicates where each method is described:

Table 4–1 How to Identify a Problem

Method	Reference
Using the troubleshooting tables	This chapter
Running diagnostic tests	`test` command or `show fru` command as described in the ''Console Reported Problems'' section in this chapter.

Note

If you are running Microsoft Windows NT, switch from the ARC to the SRM console before you can run the `test` command. For information about switching to the SRM console, refer to ''Switching from ARC to SRM'' in Chapter 1.

Task Overview

Steps to Identifying a Problem

Table 4–2 describes the steps required to identify and fix system problems.

Table 4–2 Steps to Resolving Problems

Step	Description
1	Determine type of problem.
2	Locate problem in troubleshooting tables.
3	Follow suggested actions to resolve problem.
4	If necessary, run diagnostic tests.
5	Contact Digital service representative or your maintenance provider.

The next sections describe these steps.

Determining Type of Problem

Types of System Problems

Determine the type of problem that your system is experiencing from the list in Table 4–3.

Table 4–3 Problem Reference

Problem	Section
System powers down unexpectedly or does not power up.	Power Problems
Power-up screens are not displayed on the console terminal.	Problems Getting to Console Mode
Power-up screens report an error or do not complete.	Console Reported Problems
System cannot find the boot device or the device does not boot.	Boot Problems
Operating system startup screen does not appear, software applications do not run, or operating system reports an error.	Operating System Reported Problems
Some RAID drives do not appear on the `show device d` display; drives on the controller power up with Fault light on; image copy of DRA logical drive does not boot; cannot access disks.	Problems with RAID Devices

If you cannot locate the problem your system is experiencing, or if the corrective actions in the troubleshooting tables do not resolve the problem, see the section ‘‘Reporting Problems to Digital Services.’’

Reporting Problems to Digital Services

Pre-Call Checklist

If you are unable to locate the system problem in the previous sections of this chapter, or the actions suggested could not resolve the problem, contact the nearest Digital support center. Before calling to report a problem, complete these steps.

1. Locate the part and serial numbers, printed on the label at the rear of your system. Record these numbers on a copy of the Problem Worksheet in this chapter.

   The support center will need this information when you call.

2. Fill in the ‘‘Status of the System’’ information on the worksheet.

3. Note the problem, possible causes if you know them, and solutions suggested in the previous sections. Also indicate what actions (if any) you have already taken to try to correct the problem.

4. Be prepared to read information from the screen and to enter commands at the keyboard while you talk to the support center representative.

Digital Support Center Contact Numbers

Table 4–4 lists the telephone numbers for contacting your Digital support center.

If a Digital Services number for your area is not listed in Table 4–4, contact your local Digital office for assistance.

Table 4–4 Digital Support Centers

Country	Telephone Number
UNITED STATES	1-800-354-9000
Colorado Springs, CO	
From US/Canada/Mexico	719-592-7000
Shrewsbury, MA	
From US/Canada/Mexico	508-841-3700
Alpharetta, GA	
From US/Canada/Mexico	404-343-0000
AUSTRALIA	31-2-5615252
AUSTRIA	0222-86630-555
BELGIUM	02-7297744
CANADA	
English	1-800-267-5251
French	1-800-267-2603
DENMARK	80301005
FINLAND	90 9800 2878
FRANCE	1-69874123
GERMANY	01307702
HONG KONG	852-4149779
ISRAEL	052-592-300
ITALY	2-1678 20062
KOREA	82-2-7991114
MALAYSIA	60-3-2300111
MEXICO	520140810017
NETHERLANDS	030-832888
NORTHERN IRELAND	0232 381381
NORWAY	02-256300

(continued on next page)

Table 4–4 (Cont.) Digital Support Centers

Country	Telephone Number
PHILLIPPINES	623-810-5156
PORTUGAL	
LISBON	01-3877051
OPORTO	02-6068805
PUERTO RICO	800-981-4764
REPUBLIC OF IRELAND	01-381216
SINGAPORE	330-6225
SPAIN	
MADRID	34-(9)1-5834257
BARCELONA	34-(9)3-4012222
SWEDEN	08-988835
THAILAND	66-254-8191
UNITED KINGDOM	025 6-59200
JAPAN (Tokyo)	
Trouble	0120-113035 (toll-free)
SPS Telephone Support	0120-113036 (toll-free)
Commodity Products Phone	0120-206042 (toll-free)
Special Account Customers	0120-113334 (toll-free)
Windows NT Hot Line	03-3207-2881

AlphaServer 2000 Problem Worksheet

DEC service representative telephone number: _____

Serial Number: _____

Status of the System (check all that apply):

____ DC power light is not on

____ OCP power/diagnostic display failure message

____ Operating system fails to boot

_____ Diagnostic test error message

_____ Console program fails to boot

_____ Console error message

OCP powerup/diagnostic display:

_____

_____

_____

Screen error message:

_____

_____

_____

_____

Troubleshooting notes:

_____

_____

_____

_____

_____

_____

_____

MA00086

Power Problems

This section describes how to troubleshoot the system when there is no power at the system enclosure or when the power supply subsystem lights indicate power trouble.

Table 4–5 Troubleshooting Power Problems

Symptom	Action
No AC power.	• Check the power source and power cord. • Check that the system cover is properly secured. A safety interlock switch shuts off power to the system if the cover is removed. • If there are two power supplies, make sure that both power supplies are plugged in.
AC power is present, but system does not power on.	• Check the DC On/Off button setting on the operator control panel. • Check that the ambient room temperature is within environmental specifications (10–35°C, 50–95°F) • Check power configuration rules. If you have two CPUs, you need two power supplies. • Check that internal power supply cables are plugged in at the right place on both the power supply and system backplane.
Power supply shuts down after approximately 5 seconds (fan failure).	Using a flashlight, look through the front (to the left of the internal StorageWorks shelf) to determine if the 6.75-inch fan is spinning at power-up. A failure of the 6.75-inch fan causes the system to shut down after approximately 5 seconds.

Problems Getting to Console Mode

This section describes how to troubleshoot the system when you power up the system, but the console terminal does not display the power-up screen.

Table 4–6 Troubleshooting Problems Getting to Console Mode

Symptom	Action
Power-up screen is not displayed.	Check power-up/diagnostic display on the operator control panel. (Table 4–7) for a failure during self-tests. Check that keyboard and monitor are properly connected and powered on (''Terminal Connections'' section in Chapter 1). If the power-up screen is not displayed, yet the system enters console mode when you press the Return key, check that the `console` environment variable is set correctly. If you are using a VGA console terminal, the variable should be set to ''graphics.'' If you are using a serial terminal, the variable should be set to ''serial.'' If `console` is set to ''serial,'' the power-up screen is routed to the COM1 serial communicaton port (`set console` command section in the *AlphaServer 2000 /2100 Firmware Reference Guide*) and cannot be viewed from the VGA monitor. Try connecting a console terminal to the COM1 serial communication port (''Terminal Connections'' section in Chapter 1). If necessary use a 9-pin connector. Check baud rate setting for console terminal and system. The system baud rate setting is 9600. When using the COM1 port, set the `console` environment variable to ''serial.''

Interpreting the Operator Control Panel Power-Up Display

Table 4–7 describes how to interpret messages that may be displayed on the power-up display located on the operator control panel on the front of the system (Figure 2–1).

CPU Failover

AlphaServer 2000 systems offer high-availability ‘‘failover’’ functionality. If your system has more than one CPU, the failover feature allows the system to power up and boot the operating system even if only one CPU is working.

How Failover Works

During either a power-up or system reset, the serial ROM tests check for a good CPU starting with CPU0, to serve as the primary CPU. The primary CPU is the only CPU that tests memory and reads the flash ROM code.

If a CPU fails serial ROM tests, or if the CPU has an error logged to its serial control bus EEPROM, that CPU is disabled. The lowest numbered passing CPU serves as the primary CPU. If all CPU modules fail their power-up diagnostics, then CPU0 serves as the primary CPU.

Note

The CPU number of the CPU serving as the primary CPU is displayed in the SRM console prompt; for example, `P01>>>`.

How to Determine the Status of CPU Tests

If a CPU fails during power-up, the Halt button LED on the operator control panel lights for a few seconds and the power-up /diagnostic display `CPU STATUS` message shows the failing CPU (''F'' indicates failure).

You can also use the following firmware commands to examine the status of CPU tests or to see if errors are logged to a CPU.

- `show fru`, described in the next section
- `show config`, described in Chapter 3

Table 4–7 Interpreting Operator Control Panel Power-Up Display

Message	Meaning
TEST	Displayed while the system performs diagnostic tests and exercisers. The type of module under test, its slot number, and the currently executing test number, are also displayed.
NO MEM INSTALLED	Displayed if you power up with no memory installed.
FAIL *module_type*	If an error is detected in the CPU, memory, or I/O, a failure message is displayed and the Halt button LED lights for a few seconds. The error is logged to the appropriate module via the serial control bus. In nearly all cases, the power-up tests continue. The *module_type* and slot number for the module that failed, along with the test number that detected the error are also displayed. Module types and/or slot numbers: CPU_nn — CPU module (0 or 1) MEM_nn — Memory module (0 or 1) I/O_0 — I/O backplane I/O_1 — Expansion I/O module (PCI)
CPU STATUS	Summary of CPU testing—The status of each CPU from right to left, starting with CPU0 is displayed: ''P'' — CPU passed ''F'' — CPU failed ''–'' — CPU not present
STARTING CPU #	The console is starting the primary CPU.
TEST MEM BANK #	The console is testing memory.
PROBE I/O SUBSYS	The console is checking the PCI and EISA bridges.
SYSTEM RESET	The Reset button has been pressed.
Model x/xxx	When the system is under operating system control, the CPU variant (*x*) and system model number (*xxx*) are displayed unless you supply your own text using the ocp_ text environment variable.

Console Reported Problems

This section describes how to troubleshoot your system when self-tests do not complete or when error messages are displayed on your console terminal in console mode.

Table 4–8 describes problems reported by the console and their solutions.

Table 4–8 Troubleshooting Console Reported Problems

Symptom	Action
Power-up tests do not complete.	Use power-up/diagnostic display on the operator control panel (Table 4–7).
The system powers up to the `ash>` prompt.	Reinstall firmware. Refer to the firmware update documentation for firmware installation instructions. Contact your Digital support center if you do not have a backup copy of the firmware.
Console program reports error.	Use power-up/diagnostic display on the operator control panel (Table 4–7) to determine error.
• Operator control panel displays failure message at power-up • Halt button LED lights during power-up • Power-up screen includes error messages	Use the `show fru` command described in the next section to see if errors have been logged. Examine the console event log (enter the `cat el` command) or power-up screens to check for embedded error messages recorded during power-up. If power-up screens or console event log indicate problems with mass storage devices, or if storage devices are missing from the `show config` display, use the troubleshooting flow charts (Table 4–9 and Table 4–10) to determine the problem. If power-up screens or console event log indicate problems with EISA devices, or if EISA devices are missing from the `show config` display, use the troubleshooting flow chart (Table 4–11) to determine the problem.

(continued on next page)

Table 4–8 (Cont.) Troubleshooting Console Reported Problems

Symptom	Action
	If power-up screens or console event log indicate problems with PCI devices, or if PCI devices are missing from the `show config` display, use the troubleshooting flow chart (Table 4–12) to determine the problem. Run the `test` command to verify the problem. See the description at the end of this section.

show fru

The `show fru` command reports module and error information for the following field-replaceable units (FRUs) based on the serial control bus EEPROM data:

- CPU modules
- Memory modules
- I/O modules

For each of the above modules, the slot position, option, part, revision, and serial numbers, as well as any reported symptom-directed diagnostics (SDD) and test-directed diagnostics (TDD) event logs are displayed.

In addition, installed PCI and EISA modules are displayed with their respective slot numbers.

Synopsis:

show fru

Example:

```
P00>>> show fru
          ❶      ❷            ❸       ❹            ❺

                                 Rev                    Events logged
 Slot   Option  Part#           Hw Sw   Serial#         SDD     TDD
   0    IO      B2111-AA        A1 0    ML41100003      00      00
   2    CPU0    B2020-AA        B1 9    ML43400028      00      00
   5    MEM1    B2023-BA        A1 0    AY34915430      00      00

 Slot   Option                  Hose 0, PCI
   6    DECchip 21050-AA
   7    DECchip 21040-AA
   8    DECchip 21050-AA

 Slot   Option                  Hose 1, EISA
   1    ADP0001
   2    DEC4220
   5    DEC3002
   6    DEC4250
   7    CPQ3011

 Slot   Option                  Hose 2, PCI
P00>>>
```

❶ Option name (I/O, CPU#, or MEM#)

❷ Part number of option

❸ Revision numbers (hardware and firmware)

❹ Serial number

❺ Events logged:

Numbers other than ‘‘00’’ indicate that errors have been logged.

SDD: Number of symptom-directed diagnostic events logged by the operating system, or in the case of memory, by the operating system and firmware diagnostics.
TDD: Number of test-directed diagnostic events logged by the firmware diagnostics.

test

The `test` command runs firmware diagnostics for the entire core system. The tests are run sequentially, and the status of each subsystem test is displayed to the console terminal as the tests progress. If a particular device is not available to test, a message is displayed.

The `test` script tests devices in the following order:

1. Memory tests (one pass)
2. Read-only tests: DK* disks, DR* disks, MK* tapes, DV* diskettes
3. Console loopback tests if `lb` argument is specified: COM2 serial port and parallel port
4. VGA console tests—These tests are run only if the console environment variable is set to ''serial.'' The VGA console test displays rows of the letter ''H''.
5. Network external loopback tests for EW*—This test is run if a Digital Ethernet controller (EW*) is present. The test requires that the Ethernet port be terminated or connected to a live network or the test will fail.

Note

By default, no write tests are performed on disk and tape drives. Media must be installed to test the diskette drive and tape drives.

Synopsis:

test

Example:

In the following example, the system is tested, and the tests are completed successfully.

Console Reported Problems

```
P00>>> test
 2:32:12  August 4, 1994
Testing the Memory
Testing the DK* Disks(read only)
dkb600.6.0.2.1 has no media present or is disabled via the RUN/STOP switch
file open failed for dkb600.6.0.2.1
No DR* Disks available for testing
Testing the MK* Tapes(read only)
Testing the DV* Floppy Disks(read only)
file open failed for dva0.0.0.0.1
Testing the VGA(Alphanumeric Mode only)
Testing the EW* Network
 2:33:15  August 4, 1994
P00>>>
```

Mass Storage Problems Indicated at Power-Up

Mass storage failures at power-up are usually indicated by read fail messages.

- Table 4–9 provides information for troubleshooting fixed-media mass storage problems indicated at power-up.
- Table 4–10 provides information for troubleshooting removable-media storage problems indicated at power-up. Use these tables to diagnose the likely cause of the problem.

Table 4–9 Troubleshooting Fixed-Media Problems

Problem	Symptom	Corrective Action
Drive has failed.	Fault LED for drive is on (steady).	Replace drive.
Duplicate SCSI IDs (when removable-media bus is extended to StorageWorks shelf).	Drives with duplicate SCSI IDs are missing from the `show config` display.	Correct removable-media SCSI IDs.
SCSI ID is set to 7 (reserved for host ID).	Valid drives are missing from the `show config` display. One drive may appear seven times on the `show config` display.	Correct SCSI IDs.
Duplicate host IDs on a shared bus.	Valid drives are missing from the `show config` display. One drive may appear seven times on the configuration screen display.	Change host ID using the `set pk*0_host_id` command described in the *AlphaServer 2000 /2100 Firmware Reference Guide*.

(continued on next page)

Table 4–9 (Cont.) Troubleshooting Fixed-Media Problems

Problem	Symptom	Corrective Action
I/O backplane failure (if removable-media bus is extended to StorageWorks shelf) or PCI or EISA storage adapter option failure.	Problems persist after eliminating the above problem sources.	Replace storage adapter module or I/O backplane.

Table 4–10 Troubleshooting Removable-Media Problems

Problem	Symptom	Corrective Action
Drive failure.	Fault LED for drive is on (steady).	Replace drive.
Duplicate SCSI IDs.	Drives with duplicate SCSI IDs are missing from the `show config` display.	Correct SCSI IDs.
SCSI ID is set to 7 (reserved for host ID.)	Valid drives are missing from the `show config` display. One drive may appear seven times on the `show config` display.	Correct SCSI IDs.
Duplicate host IDs on a shared bus.	Valid drives are missing from the `show config` display. One drive may appear seven times on the configuration screen display.	Change host ID using the `set pk*0_host_id` command described in the *AlphaServer 2000/2100 Firmware Reference Guide*.
Missing or loose cables.	Activity LEDs do not come on. Drive missing from the `show config` display.	Remove device and inspect cable connections.
Missing terminator.	Read/write errors in console event log; storage adapter port may fail.	Attach terminators as needed: internal SCSI terminator (12-41296-01) or external SCSI terminator (12-37004-04).
Extra terminator.	Devices produce errors or device IDs are dropped.	Check that SCSI bus is terminated only at beginning and end. Remove unnecessary terminators.
I/O backplane failure.	Problems persist after eliminating the above problem sources.	Replace I/O backplane.

EISA Bus Problems Indicated at Power-Up

EISA bus failures at power-up are usually indicated by the following message displayed during power-up:

```
EISA Configuration Error. Run the EISA Configuration
Utility.
```

Run the EISA Configuration Utility (ECU) if this message is displayed.

Table 4–11 provides information for troubleshooting EISA bus problems that continue after you run the ECU.

Table 4–11 Troubleshooting EISA Problems

Step	Action
1	Confirm that the EISA module and any cabling are properly seated.
2	Run the ECU as described in Chapter 3 to: • Confirm that the system has been configured with the most recently installed controller. • See what the hardware jumper and switch setting should be for each ISA controller. • See what the software setting should be for each ISA and EISA controller. • See if the ECU deactivated (<>) any controllers to prevent conflict. • See if any controllers are locked (!), which limits the ECU's ability to change resource assignments.
3	Confirm that hardware jumpers and switches on ISA controllers reflect the settings indicated by the ECU. Start with the last ISA module installed.
4	Check for a bad slot by moving the last installed controller to a different slot.
5	Call option manufacturer or Digital customer support for help.

PCI Bus Problems Indicated at Power-Up

PCI bus failures at power-up are usually indicated by the inability of the system to see the device. Use Table 4–12 to diagnose the likely cause of the problem.

Table 4–12 Troubleshooting PCI Problems

Step	Action
1	Confirm that the PCI module and any cabling are properly seated.
2	Check for a bad slot by moving the last installed controller to a different slot.
3	Call option manufacturer or Digital customer support for help.

Boot Problems

This section describes how to troubleshoot problems that occur while the system is booting operating system software.

Table 4–13 describes possible boot problems and their solutions.

Table 4–13 Troubleshooting Boot Problems

Symptom	Action
System cannot find boot device.	Verify that your system recognizes the boot device, using the `show device` command. Refer to ‘‘Verifying System Configuration ’’ in Chapter 3. Check that the boot device environment variable correctly identifies the boot device: • DEC OSF/1 and OpenVMS: See the `boot` command in the *AlphaServer 2000/2100 Firmware Reference Guide*. • Windows NT: See the FWSEARCHPATH environment variable in the *AlphaServer 2000 /2100 Firmware Reference Guide*.
Device does not boot.	Check that the Halt button is set to the ‘‘out’’ position. Run the `test` command. See the description in the section ‘‘Console Reported Problems,’’ earlier in this chapter.

Operating System Reported Problems

Table 4–14 describes possible operating system problems and their solutions.

Table 4–14 Troubleshooting Operating System Reported Errors

Symptom	Action
System is hung or has crashed.	Examine the crash dump file. Refer to *OpenVMS AXP Alpha System Dump Analyzer Utility Manual* for information on how to interpret OpenVMS crash dump files. Refer to the *Guide to Kernel Debugging* (AA–PS2TA–TE) for information on using the DEC OSF/1 Krash Utility.
Operating system is up.	Have the Digital support center examine the operating system error log files to isolate the problem. Self-maintenance customers can refer to the *AlphaServer 2000/2100/2100 RM/2100 CAB Series Service Guide*. If the problem occurs intermittently, have the Digital support center run an operating system exerciser, such as DEC VET to stress the system. Refer to the *DEC Verifier and Exerciser Tool User's Guide* (AA–PTTMA–TE) for instructions on running DEC VET.

Problems with RAID Devices

Table 4–15 provides troubleshooting hints for AlphaServer 2000 systems that have the StorageWorks RAID Array 200 Subsystem. The RAID subsystem includes the SWXCR-E*x* EISA backplane RAID controller.

Table 4–15 Troubleshooting RAID Problems

Symptom	Action
Some RAID drives do not appear on the `show device d` display.	Valid configured RAID logical drives will appear as DRA0–DRA*n*, not as DK*n*. Configure the drives by running the RAID Configuration Utility (RCU), following the instructions in the *StorageWorks RAID Array 200 Subsystem Family Installation and Configuration Guide*, EK-SWRA2-IG. Reminder: several physical disks can be grouped as a single logical DRA*n* device.
Drives on the RAID subsystem power up with the amber Fault light on.	Whenever you move drives onto or off of the SWXCR-E*x* controller, run the RAID Configuration Utility to set up the drives and logical units. Follow the instructions in the *StorageWorks RAID Array 200 Subsystem Family Installation and Configuration Guide.*
Image copy of DRA logical drive does not boot (OpenVMS systems).	If you copy the contents of a system disk to your RAID subsystem using the BACKUP/IMAGE command, for example, you need to repeat several steps in the data device installation procedure, as described in the *StorageWorks RAID Array 200 Subsystem Family Software User's Guide for OpenVMS AXP*, AA-Q6WVA-TE, in order to make the second device a bootable device.
Cannot access disks connected to the RAID subsystem on Microsoft Windows NT systems.	On Microsoft Windows NT systems, disks connected to the SWXCR-E*x* controller must be spun up before they can be accessed. While running the ECU, verify that the controller is set to spin up two disks every six seconds. This is the default setting if you are using the default configuration files for the controller. If the settings are different, adjust them as needed.

Glossary

10BASE-T Ethernet network

IEEE standard 802.3-compliant Ethernet products used for local distribution of data. These networking products characteristically use twisted-pair cable.

AlphaGeneration

Identifies products and services that take advantage of Digital's Alpha AXP 64-bit computing environments.

AlphaServer

Digital's new generation of server systems based on the Alpha AXP 64-bit computing architecture.

ARC

User interface to the console firmware for operating systems that require firmware compliance with the *Windows NT Portable Boot Loader Specification*. ARC stands for Advanced RISC Computing.

AUI Ethernet network

Attachment unit interface. An IEEE standard 802.3-compliant Ethernet network connected with standard Ethernet cable.

autoboot

A system boot initiated automatically by software when the system is powered up or reset.

availability

The amount of scheduled time that a computing system provides application service during the year. Availability is typically measured as either a percentage of uptime per year or as system unavailability, the number of hours or minutes of downtime per year.

BA350 storage shelf

A StorageWorks modular storage shelf used for disk storage in some AlphaServer systems.

BA720 enclosure

The enclosure that houses the AlphaServer 2000 deskside pedestal system.

BA740 enclosure

The enclosure that houses the AlphaServer 2100 large pedestal system.

BA741 enclosure

The enclosure that houses the AlphaServer 2100 RM (rackmountable) system and AlphaServer 2100 CAB (cabinet) system.

backplane

The main board or panel that connects all of the modules in a computer system.

backup cache

A second, very fast cache memory that is closely coupled with the processor.

bandwidth

Term used to express the rate of data transfer in a bus or I/O channel. It is expressed as the amount of data that can be transferred in a given time, for example, megabytes per second.

battery backup unit

A battery unit that provides power to the entire system enclosure (or to an expander enclosure) in the event of a power failure. Another term for uninterruptible power supply (UPS).

boot

Short for bootstrap. To load an operating system into memory.

boot device

The device from which the system bootstrap software is acquired.

boot flags

A flag is a system parameter set by the user. Boot flags contain information that is read and used by the bootstrap software during a system bootstrap procedure.

boot server

A computer system that provides boot services to remote devices such as network routers.

bootstrap

The process of loading an operating system into memory.

bugcheck

A software condition, usually the response to software's detection of an ''internal inconsistency,'' which results in the execution of the system bugcheck code.

bus

A collection of many transmission lines or wires. The bus interconnects computer system components, providing a communications path for addresses, data, and control information or external terminals and systems in a communications network.

bystander

A system bus node (CPU, standard I/O, or memory) that is not addressed by a current system bus commander.

byte

A group of eight contiguous bits starting on an addressable byte boundary. The bits are numbered right to left, 0 through 7.

cache memory

A small, high-speed memory placed between slower main memory and the processor. A cache increases effective memory transfer rates and processor speed. It contains copies of data recently used by the processor and fetches several bytes of data from memory in anticipation that the processor will access the next sequential series of bytes.

card cage

A mechanical assembly in the shape of a frame that holds modules against the system and storage backplanes.

carrier

The individual container for all StorageWorks devices, power supplies, and so forth. In some cases because of small form factors, more than one device can be mounted in a carrier. Carriers can be inserted in modular shelves. Modular shelves can be mounted in modular enclosures.

CD–ROM

A read-only compact disc. The optical removable media used in a compact disc reader.

central processing unit (CPU)

The unit of the computer that is responsible for interpreting and executing instructions.

client-server computing

An approach to computing whereby a computer—the ‘‘server’’—provides a set of services across a network to a group of computers requesting those services—the ‘‘clients.’’

cluster

A group of networked computers that communicate over a common interface. The systems in the cluster share resources, and software programs work in close cooperation.

cold bootstrap

A bootstrap operation following a power-up or system initialization (restart). On Alpha AXP based systems, the console loads PALcode, sizes memory, and initializes environment variables.

commander

In a particular bus transaction, a CPU or standard I/O that initiates the transaction.

command line interface

One of two modes of operation in the AlphaServer operator interface. The command line interface supports the OpenVMS and DEC OSF/1 operating systems. It allows you to configure and test the hardware, examine and alter system state, and boot the operating system.

console mode

The state in which the system and the console terminal operate under the control of the console program.

console program

The code that the executes during console mode.

console subsystem

The subsystem that provides the user interface for a computer system when the operating system is not running.

console terminal

The terminal connected to the console subsystem. It is used to start the system and direct activities between the computer operator and the console subsystem.

CPU failover

On multiprocessor AlphaServer systems, functionality that allows the system to power up and boot the operating system even if only one CPU is working.

data bus

A bus used to carry data between two or more components of the system.

data cache

A high-speed cache memory reserved for the storage of data. Abbreviated as D-cache.

DECchip 21064 processor

The CMOS, single-chip processor based on the Alpha AXP architecture and used on many AlphaGeneration computers.

DEC OSF/1 Version 2.0 for AXP systems

A general-purpose operating system based on the Open Software Foundation OSF/1 2.0 technology. DEC OSF/1 V2.0 runs on the range of AlphaGeneration systems, from workstations to servers.

DEC VET

Digital DEC Verifier and Exerciser Tool. A multipurpose system diagnostic tool that performs exerciser-oriented maintenance testing.

diagnostic program

A program that is used to find and correct problems with a computer system.

direct-mapping cache

A cache organization in which only one address comparison is needed to locate any data in the cache, because any block of main memory data can be placed in only one possible position in the cache.

direct memory access (DMA)

Access to memory by an I/O device that does not require processor intervention.

DRAM

Dynamic random-access memory. Read/write memory that must be refreshed (read from or written to) periodically to maintain the storage of information.

DSSI

Digital's proprietary data bus that uses the System Communication Architecture (SCA) protocols for direct host-to-storage communications.

DSSI cluster

A cluster system that uses the DSSI bus as the interconnect between DSSI disks and systems.

DUP server

Diagnostic Utility Program server. A firmware program on-board DSSI devices that allows a user to set host to a specified device in order to run internal tests or modify device parameters.

ECC

Error correction code. Code and algorithms used by logic to facilitate error detection and correction.

EEPROM

Electrically erasable programmable read-only memory. A memory device that can be byte-erased, written to, and read from.

EISA bus

Extended Industry Standard Architecture bus. A 32-bit industry-standard I/O bus used primarily in high-end PCs and servers.

EISA Configuration Utility (ECU)

A menu-based utility supplied on diskette that is used for configuring EISA or ISA options. The ECU uses the option's configuration (CFG) file to create a conflict-free configuration.

environment variables

Global data structures that can be accessed only from console mode. The setting of these data structures determines how a system powers up, boots the operating system, and operates.

Ethernet

IEEE 802.3 standard local area network.

ERF/UERF

Error Report Formatter. ERF is used to present error log information for OpenVMS. UERF is used to present error log information for DEC OSF/1.

Factory Installed Software (FIS)

Operating system software that is loaded into a system disk during manufacturing. On site, the FIS is bootstrapped in the system.

fail-safe loader (FSL)

A program that allows you to power up without initiating drivers or running power-up diagnostics. From the fail-safe loader you can perform limited console functions.

Fast SCSI

An optional mode of SCSI-2 that allows transmission rates of up to 10 megabytes per second.

FDDI

Fiber Distributed Data Interface. A high-speed networking technology that uses fiber optics as the transmissions medium.

FIB

Flexible interconnect bridge. A converter that allows the expansion of the system enclosure to other DSSI devices and systems.

field-replaceable unit

Any system component that a qualified service person is able to replace on site.

firmware

Software code stored in hardware.

fixed-media compartments

Compartments that house nonremovable storage media.

Flash ROM

Flash-erasable programmable read-only memory. Flash ROMs can be bank- or bulk-erased.

FRU

Field-replaceable unit. Any system component that a qualified service person is able to replace on site.

full-height device

Standard form factor for 5 1/4-inch storage devices.

half-height device

Standard form factor for storage devices that are not the height of full-height devices.

halt

The action of transferring control of the computer system to the console program.

hose

The interface between the card cage and the I/O subsystems.

hot swap

The process of removing a device from the system without shutting down the operating system or powering down the hardware.

initialization

The sequence of steps that prepare the computer system to start. Occurs after a system has been powered up.

instruction cache

A high-speed cache memory reserved for the storage of instructions. Abbreviated as I-cache.

interrupt request lines (IRQs)

Bus signals that connect an EISA or ISA module (for example, a disk controller) to the system so that the module can get the system's attention via an interrupt.

I/O backplane

One of two backplanes on the AlphaServer 2000 system. The I/O backplane contains three PCI option slots and seven EISA option slots. It also contains a SCSI channel, diskette controller, two serial ports, and a parallel printer port.

ISA

Industry Standard Architecture. An 8-bit or 16-bit industry-standard I/O bus, widely used in personal computer products. The EISA bus is a superset of the ISA bus.

LAN

Local area network. A high-speed network that supports computers that are connected over limited distances.

latency

The amount of time it takes the system to respond to an event.

LED

Light-emitting diode. A semiconductor device that glows when supplied with voltage. A LED is used as an indicator light.

loopback test

Internal and external tests that are used to isolate a failure by testing segments of a particular control or data path. A subset of ROM-based diagnostics.

machine check/interrupts

An operating system action triggered by certain system hardware-detected errors that can be fatal to system operation. Once triggered, machine check handler software analyzes the error.

mass storage device

An input/output device on which data is stored. Typical mass storage devices include disks, magnetic tapes, and CD–ROM.

MAU

Medium attachment unit. On an Ethernet LAN, a device that converts the encoded data signals from various cabling media (for example, fiber optic, coaxial, or ThinWire) to permit connection to a networking station.

memory interleaving

The process of assigning consecutive physical memory addresses across multiple memory controllers. Improves total memory bandwidth by overlapping system bus command execution across multiple memory modules.

menu interface

One of two modes of operation in the AlphaServer operator interface. Menu mode lets you boot the Windows NT operating system by selecting choices from a simple menu. The EISA Configuration Utility is also run from the menu interface.

modular shelves

In the StorageWorks modular subsystem, a shelf contains one or more modular carriers, generally up to a limit of seven. Modular shelves can be mounted in system enclosures, in I/O expansion enclosures, and in various StorageWorks modular enclosures.

MOP

Maintenance Operations Protocol. A transport protocol for network bootstraps and other network operations.

motherboard

The main circuit board of a computer. The motherboard contains the base electronics for the system (for example, base I/O, CPU, ROM, and console serial line unit) and has connectors where options (such as I/Os and memories) can be plugged in.

multiprocessing system

A system that executes multiple tasks simultaneously.

node

A device that has an address on, is connected to, and is able to communicate with other devices on a bus. Also, an individual computer system connected to the network that can communicate with other systems on the network.

NVRAM

Nonvolatile random-access memory. Memory that retains its information in the absence of power.

OCP

Operator control panel.

open system

A system that implements sufficient open specifications for interfaces, services, and supporting formats to enable applications software to:

- Be ported across a wide range of systems with minimal changes
- Interoperate with other applications on local and remote systems
- Interact with users in a style that facilitates user portability

OpenVMS AXP operating system

A general-purpose multiuser operating system that supports AlphaGeneration computers in both production and development environments. OpenVMS AXP software supports industry standards, facilitating application portability and interoperability. OpenVMS AXP provides symmetric multiprocessing (SMP) support for AlphaServer multiprocessing systems.

operating system mode

The state in which the system console terminal is under the control of the operating system. Also called program mode.

operator control panel

The panel located behind the front door of the system, which contains the power-up/diagnostic display, DC On/Off button, Halt button, and Reset button.

PALcode

Alpha AXP Privileged Architecture Library code, written to support Alpha AXP processors. PALcode implements architecturally defined behavior.

PCI

Peripheral Component Interconnect. An industry-standard expansion I/O bus that is the preferred bus for high-performance I/O options. Available in a 32-bit and a 64-bit version.

portability

The degree to which a software application can be easily moved from one computing environment to another.

porting

Adapting a given body of code so that it will provide equivalent functions in a computing environment that differs from the original implementation environment.

power-down

The sequence of steps that stops the flow of electricity to a system or its components.

power-up

The sequence of events that starts the flow of electrical current to a system or its components.

primary cache

The cache memory that is the fastest and closest to the processor.

processor module

Module that contains the CPU chip.

program mode

The state in which the system console terminal is under the control of a program other than the console program.

RAID

Redundant array of inexpensive disks. A technique that organizes disk data to improve performance and reliability. RAID has three attributes:

- It is a set of physical disks viewed by the user as a single logical device.
- The user's data is distributed across the physical set of drives in a defined manner.
- Redundant disk capacity is added so that the user's data can be recovered even if a drive fails.

RAID Configuration Utility (RCU)

A configuration utility supplied on diskette that is used to set up the disk drives and logical units on systems that have the StorageWorks RAID Array 200 Subsystem.

redundant

Describes duplicate or extra computing components that protect a computing system from failure.

reliability

The probability a device or system will not fail to perform its intended functions during a specified time.

responder

In any particular bus transaction, memory, CPU, or I/O that accepts or supplies data in response to a command/address from the system bus commander.

RISC

Reduced instruction set computer. A processor with an instruction set that is reduced in complexity.

ROM-based diagnostics

Diagnostic programs resident in read-only memory.

script

A data structure that defines a group of commands to be executed. Similar to an OpenVMS command file.

SCSI

Small Computer System Interface. An ANSI-standard interface for connecting disks and other peripheral devices to computer systems. Some devices are supported under the SCSI-1 specification; others are supported under the SCSI-2 specification.

self-test

A test that is invoked automatically when the system powers up.

serial control bus

A two-conductor serial interconnect that is independent of the system bus. This bus links the processor modules, the I/O, the memory, the power subsystem, and the operator control panel.

serial ROM

In the context of the CPU module, ROM read by the DECchip microprocessor after reset that contains low-level diagnostic and initialization routines.

SIMM

Single in-line memory module.

SMP

Symmetric multiprocessing. A processing configuration in which multiple processors in a system operate as equals, dividing and sharing the workload.

SRM

User interface to console firmware for operating systems that expect firmware compliance with the *Alpha System Reference Manual (SRM)*.

standard I/O module

Module that provides a standard set of I/O functions on some AlphaServer models. It resides in a dedicated slot in the EISA bus card cage.

storage array

A group of mass storage devices, frequently configured as one logical disk.

StorageWorks

Digital's modular storage subsystem (MSS), which is the core technology of the Alpha AXP SCSI-2 mass storage solution. Consists of a family of low-cost mass storage products that can be configured to meet current and future storage needs.

superpipelined

Describes a pipelined processor that has a larger number of pipe stages and more complex scheduling and control.

superscalar

Describes a processor that issues multiple independent instructions per clock cycle.

symmetric multiprocessing (SMP)

A processing configuration in which multiple processors in a system operate as equals, dividing and sharing the workload.

symptom-directed diagnostics (SDDs)

An approach to diagnosing computer system problems whereby error data logged by the operating system is analyzed to capture information about the problem.

system backplane

One of two backplanes on the AlphaServer 2000 system. The system backplane supports up to two CPU modules, up to two memory modules, and an expansion I/O module.

system bus

The hardware structure that interconnects the CPUs and memory modules. Data processed by the CPU is transferred throughout the system via the system bus.

system disk

The device on which the operating system resides.

TCP/IP

Transmission Control Protocol/Internet Protocol. A set of software communications protocols widely used in UNIX operating environments. TCP delivers data over a connection between applications on different computers on a network; IP controls how packets (units of data) are transferred between computers on a network.

test-directed diagnostics (TDDs)

An approach to diagnosing computer system problems whereby error data logged by diagnostic programs resident in read-only memory (RBDs) is analyzed to capture information about the problem.

thickwire

One-half inch, 50-Ohm coaxial cable that interconnects the components in many IEEE standard 802.3-compliant Ethernet networks.

ThinWire

Ethernet cabling and technology used for local distribution of data communications. ThinWire cabling is thinner than thickwire cabling.

Token Ring

A network that uses tokens to pass data sequentially. Each node on the network passes the token on to the node next to it.

twisted pair

A cable made by twisting together two insulated conductors that have no common covering.

uninterruptible power supply (UPS)

A battery-backup option that maintains AC power to a computer system if a power failure occurs.

warm bootstrap

A subset of the cold bootstrap operation. On AlphaGeneration systems, during a warm bootstrap, the console does not load PALcode, size memory, or initialize environment variables.

wide area network (WAN)

A high-speed network that connects a server to a distant host computer, PC, or other server, or that connects numerous computers in numerous distant locations.

Windows NT

''New technology'' operating system owned by Microsoft, Inc. The AlphaServer systems currently support the Windows NT, OpenVMS, and DEC OSF/1 operating systems.

write back

A cache management technique in which data from a write operation to cache is written into main memory only when the data in cache must be overwritten.

write-enabled

Indicates a device onto which data can be written.

write-protected

Indicates a device onto which data cannot be written.

write through

A cache management technique in which data from a write operation is copied to both cache and main memory.

Index

A

Accessories, list of, 2–14
Adapter
  Fast SCSI-2, 3–40
ARC firmware
  default environment variables, 3–10
ARC interface
  switching to, 1–20
Architecture
  system, 1–5
Autoboot
  DEC OSF/1, 1–25
  OpenVMS, 1–25

B

Boot menu (ARC), 1–19
Boot problems
  troubleshooting, 4–27
Boot procedure, 1–23, 1–24
  booting DEC OSF/1 automatically, 1–25
  booting OpenVMS automatically, 1–25
  for OpenVMS, 1–24
  for OSF/1, 1–24
  for Windows NT, 1–24
Bus
  system, 3–18
Bus configurations
  removable-media, 3–43
Buses, displaying (SRM), 3–14

C

Caddy
  See CD–ROM caddy
CD–ROM caddy
  loading a disc into, 1–44
CD–ROM drive
  caddyless, components, 1–40
  components, 1–38
  inserting a disc into, 1–42, 1–44
  operating, 1–38
  removing a disc from, 1–43, 1–44
  with caddy, components, 1–40
Configuration
  See also ECU
  console port, 1–14
  EISA boards, 3–34
  EISA/ISA boards, 3–36
  of environment variables, 3–17
  removable-media bus, 3–41
Configuration file (CFG), EISA and ISA, 3–30
Configuration rules
  for StorageWorks shelves, 3–44
  removable-media, 3–42
Configuration, verifying
  for DEC OSF/1, 3–5
  for OpenVMS, 3–5
  for Windows NT, 3–5
Console commands
  set bootdef_dev, 3–17
  set boot_osflags, 3–17
  set envar, 3–17
  show auto_action, 3–17

Console commands (cont'd)
show config, 3–12
show device, 3–14
show envar, 3–17
show fru, 4–17
show memory, 3–16
test, 4–19
Console device, connecting, 1–32
console environment variable, 1–14
Console mode
defined, 1–28
invoking, 1–28
invoking remotely, 1–28
invoking with Halt button, 1–28
problems, troubleshooting, 4–11, 4–15
prompt, 1–28
troubleshooting, 4–15
Console output, 1–14
Console port configurations, 1–14
Console prompt, 1–28
SRM console, 1–19
Console terminal, 1–28
Consoles
switching between ARC and SRM, 1–20
Controllers, displaying (SRM), 3–14
Cover, system
removal, 2–8
CPU failover, 4–12
CPU module
installation requirements, 3–20
location, 3–18
possible configurations, 3–20
Customer support, 4–6, 4–7

D

DAT tape drive
operating, 1–46
DC On/Off button, 1–13, 2–2
Device naming convention, 3–14
Devices
displaying (SRM), 3–14
third-party, 3–3
Diagnostic procedures
See Troubleshooting
Dimensions
system, 1–6
Disk drives
mounting, 1–36
Diskette drive
location, 1–37
Door, front
removal, 2–8
Dual-bus configuration
with internal StorageWorks, 3–44

E

ECU
actions after exiting, 3–33
configuration diskette, 3–30
defined, 3–30
invoking console firmware, 3–30
procedure for running, 3–30
starting, 3–30
EISA boards
configuring, 3–34
identifying, 3–29
EISA bus, 1–3
features of, 3–25
location, 3–18
troubleshooting, 4–24
EISA Configuration Utility
See ECU
EISA/ISA boards
configuring, 3–36
Enclosure, 1–4
Environment variables
configuring, 3–17
resetting, 1–20
setting and examining, 3–17
Environmental requirements, 1–6
Errors
commands to report, 4–17
Expansion I/O, 3–24
Extended I/O module
location, 3–18

F

Failover, 4–12
Fast SCSI-2 adapter, 3–40
Fixed-disk drives
  installing in StorageWorks, 3–46
Fixed-media
  storage problems, 4–21
FRUs
  commands to report errors, 4–17

H

Halt button
  invoking console mode with, 2–3
Hangs
  using Reset button to recover from, 2–4
Hard-disk drives
  installing in StorageWorks, 3–46
Hardware configuration display, ARC, 3–6

I

I/O bus, EISA features, 3–25
Indicators, system
  DC On/Off, 2–2
  Halt, 2–3
Installation, xiv
Internal SCSI bus, 3–40
Internal StorageWorks
  dual-bus configuration, 3–44
  shelf, 3–42
ISA boards, identifying, 3–29
ISA bus
  defined, 3–27
ISA/EISA boards
  configuring, 3–36

K

Keys, system, 1–11

M

Mass storage
  actions before operating devices, 1–36
  compartments, location, 1–37
  described, 3–40
  problems, troubleshooting, 4–21, 4–23
  supported devices, 1–37
Mass storage devices
  actions before operating, 1–36
  mounting, 1–36
  supported, 1–37
Memory module
  displaying information for (SRM), 3–16
  location, 3–18
Memory modules
  minimum and maximum, 3–22
Modem, connecting, 1–32
Modules
  CPU, 3–20
  EISA, 3–25
  expansion I/O, 3–24
  ISA, 3–27
  memory, 3–22
  PCI, 3–38
  system, accessing, 2–13
MS452 memory modules, 3–22

N

Networks
  connecting to, 1–31
  Ethernet, 1–31

O

OCP
  See Operator control panel
Operating system
  boot failures, reporting, 4–28
  booting, 1–23
  OpenVMS booting, 1–24
  OSF/1 booting, 1–24
  preboot tasks, 1–20
  problems, troubleshooting, 4–28

Operating system (cont'd)
supported, 1–3, 1–23
Windows NT booting, 1–24
Operating systems
supported, 1–3
switching, 1–29
Operator control panel
DC On/Off button, 2–2
display, interpreting, 4–12
Halt button, 2–2, 2–3
power-up/diagnostic display, 2–2
Reset button, 2–4
Options
adding, 3–2
configuring with ECU, 3–30
from non-Digital vendors, 3–2
installing, 3–2
supported, 3–4
system bus, 3–18

P

PCI, 1–4
PCI bus, 1–3
defined, 3–38
location, 2–13, 3–18
troubleshooting, 4–26
Peripheral devices, connecting, 1–32
Phone numbers
customer support, 4–7
Power cords
order numbers, 1–9
Power problems
troubleshooting, 4–10
Power requirements, 1–6, 1–8
Power supplies, 1–8
Power supply
configurations, 3–50
redundant, configuring, 3–51
Power-down procedure, 1–26
for extended power-down, 1–27
turning off DC power, 1–26
Power-up display
interpreting, 4–12
Power-up procedure, 1–14
Power-up sequence
EISA bus failures, 4–24
mass storage failures, 4–21
PCI failures, 4–26
Power-up/diagnostic display, 1–18, 2–2
Printer, connecting, 1–32
Problems
See also Troubleshooting
determining type, 4–5
identifying, 4–1, 4–4
reporting, 4–6

Q

QIC tape drive
operating, 1–50

R

RAID controller
features of, 1–3
RAID subsystem
cable routing, 3–47
guidlines, 3–49
problems with, 4–29
SWXCR, 3–46
Reboot procedure, 1–24
Removable media bus
configuring, 3–41
Removable-media
storage problems, 4–23
Removable-media compartments
configuration rules, 3–42
Removable-media devices
location, 1–37
SCSI support for, 3–41
Reset button
for recovering from hangs, 2–4

S

SCSI bus
  internal, 3–40
  node IDs, 3–44
Serial ports, 1–14
Service, telephone numbers, 4–7
show command (SRM), 3–17
show configuration command (SRM), 3–12
show device command (SRM), 3–14
show fru command (SRM), 4–17
show memory command (SRM), 3–16
SIMMs, 3–22
Site preparation, xiv
  environmental requirements, 1–6
  power requirements, 1–6
Specifications, environmental, 1–7
SRM interface
  switching to, 1–20
Startup procedure
  booting an operating system, 1–23
  checking power-up display, 1–16
  checking system settings, 1–13
  overview, 1–12
  powering up, 1–14
  preboot tasks, 1–20
Storage devices
  location, 1–37
  mounting, 1–36
  operating, 1–36
StorageWorks
  fixed disks, installing, 3–46
  fixed disks, swapping, 3–46
StorageWorks shelf
  location, 1–37
  optional, location, 1–37
StorageWorks shelf, internal
  dual-bus configuration, 3–44
Supported options, 3–4
SWXCR controller
  guidelines, 3–49
System
  architecture, 1–5
  dimensions, 1–6
System (cont'd)
  moving, 1–10
System bus
  accessing modules on, 2–13, 3–18
  location, 2–13, 3–18
System components
  front, 2–5
  front, list of, 2–6
  rear, 2–6
  rear, list of, 2–7
System Configuration Diskette, 3–30
System configuration, verifying
  for DEC OSF/1, 3–5
  for OpenVMS, 3–5
  for Windows NT, 3–5
System features
  cabinet system, 1–3
  overview, 1–3
  pedestal system, 1–3
System operation
  boot, 1–24
  reboot, 1–24
System settings
  powered down system, 1–13
System software
  booting, 1–24
System startup screen, 1–18
System, testing, 4–19
SYSTEMCFG volume label, 3–30

T

Tape drive
  See QIC tape drive; DAT tape drive
Tape drives
  mounting, 1–36
Terminals, connecting, 1–34
test command (SRM), 4–19
Testing system, 4–19
Troubleshooting, 4–1
  boot problems, 4–27
  console, 4–11
  console reported problems, 4–15
  EISA problems, 4–24

Troubleshooting (cont'd)
errors reported by operating system, 4–28
for self-maintenance customers, 4–2
interpreting the operator control panel power-up display, 4–12
mass storage problems, 4–21
operating system problems, 4–28
PCI problems, 4–26
power problems, 4–10
problem reference, 4–5
problem worksheet, 4–9
problems getting to console mode, 4–11
problems reported by the console, 4–15
RAID device problems, 4–29
reporting problems, 4–6
task overview, 4–4
test command, 4–2

U

Upgrades
planning, 3–2

V

VGA monitor, connecting, 1–34
VT terminal, connecting, 1–34

How to Order Additional Documentation

Technical Support

If you need help deciding which documentation best meets your needs, call 800-DIGITAL (800-344-4825) and press 2 for technical assistance.

Electronic Orders

If you wish to place an order through your account at the Electronic Store, dial 800-234-1998, using a modem set to 2400- or 9600-baud. You must be using a VT terminal or terminal emulator set at 8 bits, no parity. If you need assistance using the Electronic Store, call 800-DIGITAL (800-344-4825) and ask for an Electronic Store specialist.

Telephone and Direct Mail Orders

From	Call	Write
U.S.A.	DECdirect Phone: 800-DIGITAL (800-344-4825) Fax: (603) 884-5597	Digital Equipment Corporation P.O. Box CS2008 Nashua, NH 03061
Puerto Rico	Phone: (809) 781-0505 Fax: (809) 749-8377	Digital Equipment Caribbean, Inc. 3 Digital Plaza, 1st Street Suite 200 Metro Office Park San Juan, Puerto Rico 00920
Canada	Phone: 800-267-6215 Fax: (613) 592-1946	Digital Equipment of Canada Ltd. 100 Herzberg Road Kanata, Ontario, Canada K2K 2A6 Attn: DECdirect Sales
International	————	Local Digital subsidiary or approved distributor
Internal Orders[1] (for software documentation)	DTN: 264-3030 (603) 884-3030 Fax: (603) 884-3960	U.S. Software Supply Business Digital Equipment Corporation 10 Cotton Road Nashua, NH 03063-1260
Internal Orders (for hardware documentation)	DTN: 264-3030 (603) 884-3030 Fax: (603) 884-3960	U.S. Software Supply Business Digital Equipment Corporation 10 Cotton Road Nashua, NH 03063-1260

[1]Call to request an Internal Software Order Form (EN–01740–07).

Reader's Comments

AlphaServer 2000
Owner's Guide

EK–400MP–OP. A01

Your comments and suggestions help us improve the quality of our publications.

Thank you for your assistance.

I rate this manual's:	Excellent	Good	Fair	Poor
Accuracy (product works as manual says)	☐	☐	☐	☐
Completeness (enough information)	☐	☐	☐	☐
Clarity (easy to understand)	☐	☐	☐	☐
Organization (structure of subject matter)	☐	☐	☐	☐
Figures (useful)	☐	☐	☐	☐
Examples (useful)	☐	☐	☐	☐
Index (ability to find topic)	☐	☐	☐	☐
Page layout (easy to find information)	☐	☐	☐	☐

I would like to see more/less _____

_____

What I like best about this manual is _____

_____

What I like least about this manual is _____

_____

I found the following errors in this manual:

Page Description

_____ _____

_____ _____

_____ _____

Additional comments or suggestions to improve this manual:

_____

_____

_____

For software manuals, please indicate which version of the software you are using: _____

_____

Name/Title _____ Dept. _____

Company _____ Date _____

Mailing Address _____

_____ Phone _____

Do Not Tear – Fold Here and Tape

digital™

No Postage
Necessary
If Mailed
in the
United States

BUSINESS REPLY MAIL

FIRST CLASS PERMIT NO. 33 MAYNARD MASS.

POSTAGE WILL BE PAID BY ADDRESSEE

DIGITAL EQUIPMENT CORPORATION
Information Design and Consulting
MRO1–3/K10
200 FOREST STREET
MARLBORO, MA 01752-3011

Do Not Tear – Fold Here